THIS DRAWING IS UNPUBLISHED. RELEASED FOR PUBLICATION -
© COPYRIGHT - BY - ALL RIGHTS RESERVED.

CABLE ENTRY DIA. MIN	
HOUSING	.066 [1.68]
CONTACT SLOT	.041 [1.04]
FERRULE	.136 [3.45]

LOC - DIST -

REVISIONS

P	LTR	DESCRIPTION	DATE	DWN	APVD
	A	RELEASED	11-7-08	CT	DW
	B	REV. PER ECO-11-020776	17OCT2011	RJM3	DHW

1. DESIGNED FOR USE WITH RG174 AND RG316 DOUBLE BRAIDED & TFLEX 405 CABLE

2. CAPTURED CENTER CONTACT

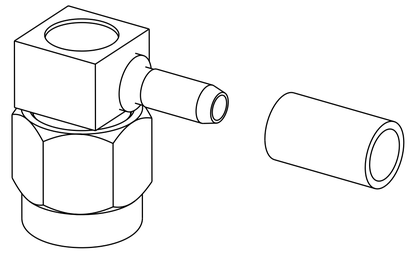

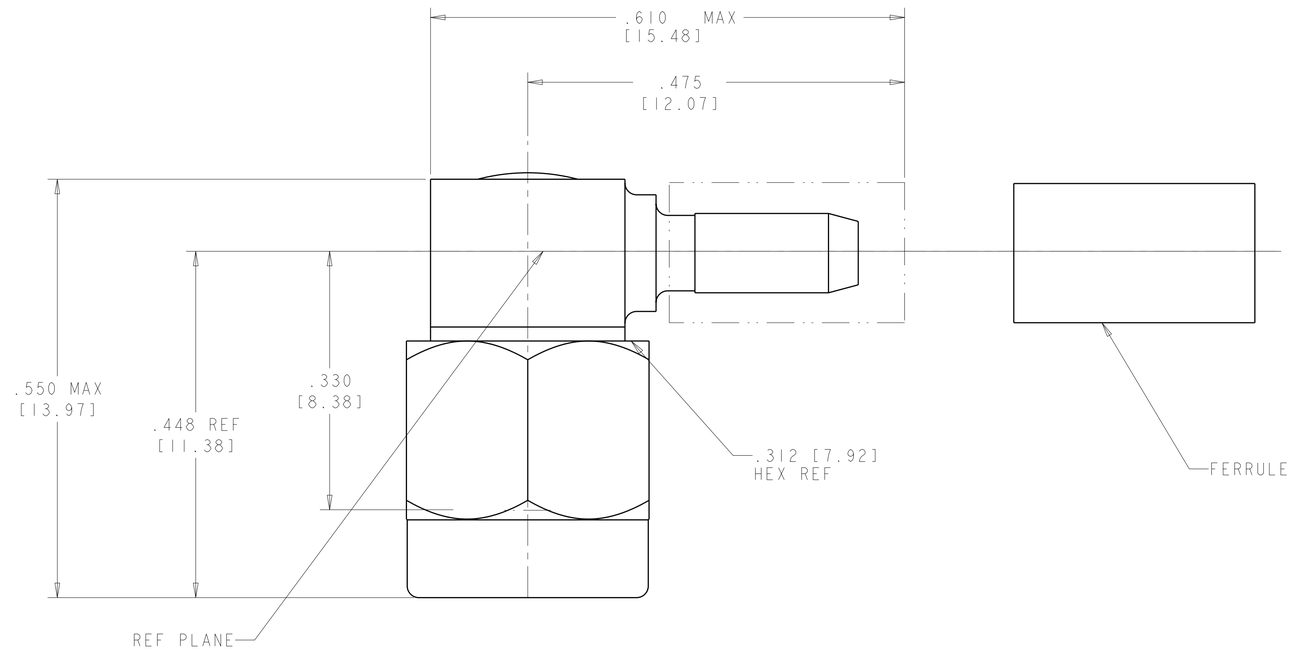

ELECTRICAL CHARACTERISTICS

NOMINAL IMPEDANCE	(ohms)	50
FREQUENCY RANGE	(GHz)	dc-12.4
VOLTAGE RATING	(V_{RMS} MAX)	250
VSWR		1.18+.02XF(GHz)
INSERTION LOSS	(dB MAX)	.07 F(GHz)
RF LEAKAGE	(dB MIN)	-90(-F(GHz))
DIELECTRIC WITHSTANDING SEA LEVEL	(V_{RMS} MIN)	750
CONTACT RESISTANCE	(Milliohms MAX)	
CENTER CONTACT		4
OUTER CONTACT		2
CABLE TO HOUSING		0.5
RF HIGH POTENTIAL	(V_{RMS} MIN) @ 5 MHz	670
INSULATION RESISTANCE	(Megohms MIN)	5000

MECHANICAL CHARACTERISTICS

INTERFACE DIMENSIONS		
PER MIL-STD-348	FIG.	310.1
RECOMMENDED MATING TORQUE	(In-Lb)	7-9
PROOF TORQUE	(In-Lb)	15
FORCE TO ENGAGE AND DISENGAGE	(In-Lb MAX)	2
CENTER CONTACT CAPTIVATION		
AXIAL	(Lb)	6
RADIAL	(In-Lb)	N/A
CABLE RETENTION		
AXIAL	(Lb MIN)	25
WEIGHT	(g)	TBD
MATING CYCLES		500

ENVIRNMENTAL CHARACTERISTICS

TEMPERATURE RANGE	(°C)	-65 TO +165
VIBRATION	MLD-STD-202	METHOD 204, CONDITION D
SHOCK	MLD-STD-202	METHOD 213, CONDITION I
THERMAL SHOCK	MLD-STD-202	METHOD 107, CONDITION B
MOISTURE RESISANCE	MLD-STD-202	METHOD 106, 7b OMITTED NO MEASUREMENT AT HIGH HUMIDITY I.R.>200 MEGOHMS WITHIN 5 MINUTES
CORROSION	MLD-STD-202	METHOD 101, CONDITION B

COMPONENT	MATERIAL	FINISH
HOUSING CAP	BRASS PER ASTM-B-16 HALF HARD	GOLD PLATE PER ASTM-B-488
COUPLING NUT	STAINLESS STEEL PER ASTM-A484 AND ASTM-A582, TYPE 303	GOLD PLATE PER ASTM-B-488
DIELECTRIC	TFE FLUOROCARBON PER ASTM-D-1457	N/A
CENTER CONTACT	BRASS PER ASTM-B-16 HALF HARD	GOLD PLATE PER ASTM-B-488
RETAINING RING	BERYLLIUM COPPER PER ASTM-B-194, ALLOY C17200, COND H	N/A
GASKET	SILICONE RUBBER PER ZZ-R-765	N/A
FERRULE	COPPER OR BRASS ALLOY ROCKWELL F65 MAXIMUM	GOLD PLATE PER ASTM-B-488

1996960-1
PART NO.

THIS DRAWING IS A CONTROLLED DOCUMENT.

DIMENSIONS: INCHES [mm]

TOLERANCES UNLESS OTHERWISE SPECIFIED:
0 PLC ±
1 PLC ±
2 PLC ±
3 PLC ±
4 PLC ±
ANGLES ±°

MATERIAL -
FINISH - SEE TABLE

DWN D.WILSON 15OCT2008
CHK C.C.THOMAS 11-6-08
APVD D.WILSON 11-6-08
PRODUCT SPEC -
APPLICATION SPEC -
WEIGHT -

TE Connectivity

NAME SMA R/A PLUG FOR RD316/T-FLEX 405, LOW PROFILE

SIZE A1 | CAGE CODE 00779 | DRAWING NO C-1996960 | RESTRICTED TO -

CUSTOMER DRAWING | SCALE 10:1 | SHEET 1 OF 1 | REV B

4805 (3/11)

Pro/ENGINEER DRAWING