© 2008 TE Connectivity. All Rights Reserved.

REVISIONS					
P	LTR	DESCRIPTION	DATE	DWN	APVD
	C	REV PER ECN-23-219768	06JUL2023	JAB	PD

ELECTRICAL	MECHANICAL	ENVIRONMENTAL
Nominal Impedance (Ohms) 50	Interface Dimensions	Temperature Rating
Frequency Range (GHz) DC to 18	MIL-STD-348, Fig. 319.2	-55°C TO 125°C
Voltage Rating (VRMS MIN)	Mating Characteristics:	Vibration MIL-STD-202,
250 @ Sea Level	Insertion (MAX Lbs) 3.0	Method 204, Cond. D
VSWR N/A	Withdrawal (MIN Oz) 1.0	Shock MIL-STD-202,
Insertion Loss(dB MAX) N/A	Force to Engage	Method 213, Cond. I
RF Leakage (dB MIN) N/A	and Disengage (In/Lbs MAX) 2.0	Thermal shock MIL-STD-202
Corona, 70,000 Ft (VRMS MIN) 190	Center Contact Captivation:	Method 107, Cond. B, except
D.W.V.	Axial (Lbs) 6.0	HIGH TEMP SHALL BE 115°C
(VRMS MIN) 750 @ Sea Level	Radial (In/Oz) 4.0	Moisture Resistance
Contact Resistance (Milliohms MAX)		MIL-STD-202, Method 106,
Center Contact 2.0		except step 7b (vibration)
Outer Contact 2.0		shall be omitted
RF High Potential (VRMS MIN		Corrosion MIL-STD-202,
@ 5 MHz) 500 @ Sea Level		Method 101, Cond. B,
I.R. (Megohms Min) 5000		5% salt spray

WARNING - THIS DOCUMENT CONTAINS TECHNOLOGY WHOSE EXPORT IS RESTRICTED BY THE EXPORT ADMINISTRATION REGULATIONS ("EAR") PURSUANT TO 15 C.F.R. PARTS 730-774. VIOLATIONS OF THE EAR ARE SUBJECT TO SEVERE CRIMINAL PENALTIES UNDER THE EXPORT CONTROL REFORM ACT, AS AMENDED (TITLE 50, U.S.C., SEC. 4801, ET SEQ.).

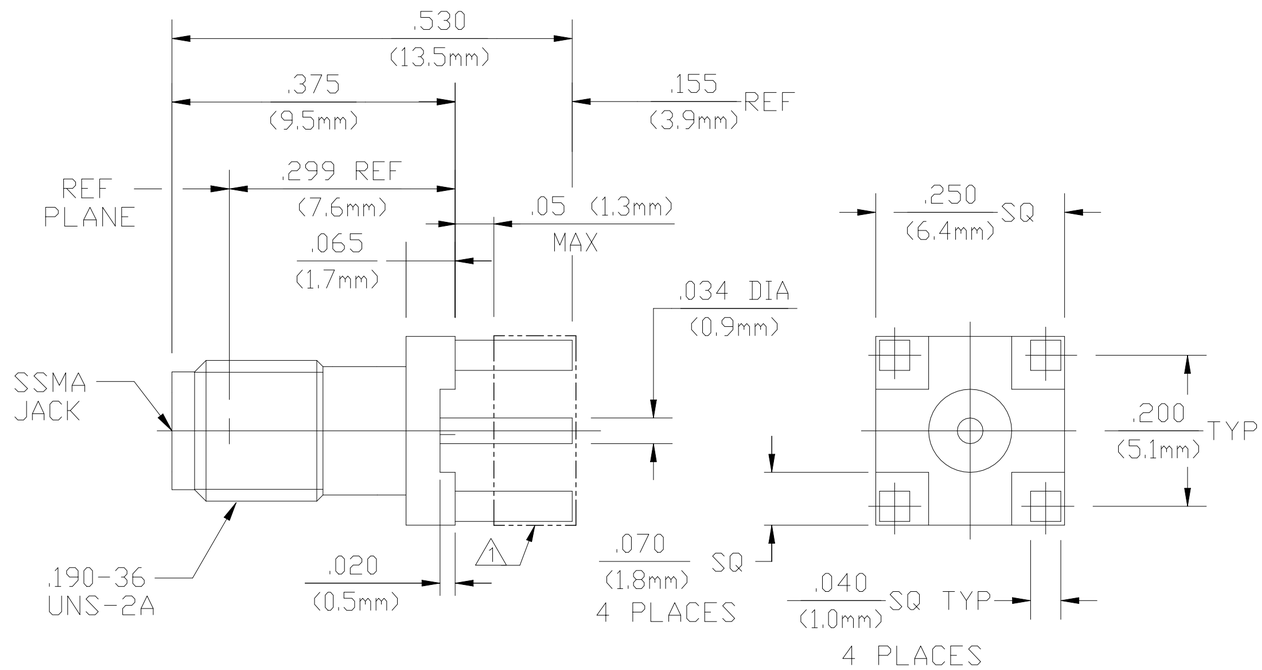

1 HOT SOLDER DIP IN AREA SHOWN USING SN60 OR SN63 IAW J-STD-001, 1996745-2 ONLY.

HOUSING	STAINLESS STEEL PER ASTM-A484 AND ASTM-A582, TYPE 303	GOLD PLATE PER MIL-G-45204 OVER NICKEL PLATE PER QQ-N-290
DIELECTRIC	TFE FLUOROCARBON PER ASTM-D-1457, MIL-P-19468, AND FED. SPEC L-P-403	N/A
CENTER CONTACT	BERYLLIUM COPPER PER ASTM-B196, ALLOY 173	GOLD PLATE PER MIL-G-45204 OVER NICKEL PLATE PER QQ-N-290 OVER COPPER PLATE PER MIL-C-14550
COMPONENT	MATERIAL	FINISH

1	1996745-2
-	1996745-1
FINSH	PART NUMBER

THIS DRAWING IS A CONTROLLED DOCUMENT.

DIMENSIONS: mm [INCHES]

TOLERANCES UNLESS OTHERWISE SPECIFIED:
0 PLC ± -
1 PLC ± -
2 PLC ± -
3 PLC ± -
4 PLC ± -
ANGLES ± -

MATERIAL -
FINISH -

DWN Denver Wilson 28MAY2008
CHK C.C.THOMAS 12-8-08
APVD D.WILSON 12-8-08
PRODUCT SPEC —
APPLICATION SPEC —
WEIGHT 0.000000

TE Connectivity

NAME SSMA Connector Vertical PCB Jack

SIZE	CAGE CODE	DRAWING NO	RESTRICTED TO
A2	00779	C-1996745	—

CUSTOMER DRAWING | SCALE NTS | SHEET 1 OF 1 | REV C

1471-9 (1/15)