THIS DRAWING IS UNPUBLISHED. RELEASED FOR PUBLICATION 20
© COPYRIGHT 20 BY - ALL RIGHTS RESERVED.

REVISIONS

P	LTR	DESCRIPTION	DATE	DWN	APVD
	A	INITIAL RELEASE	07NOV2014	PS	JK

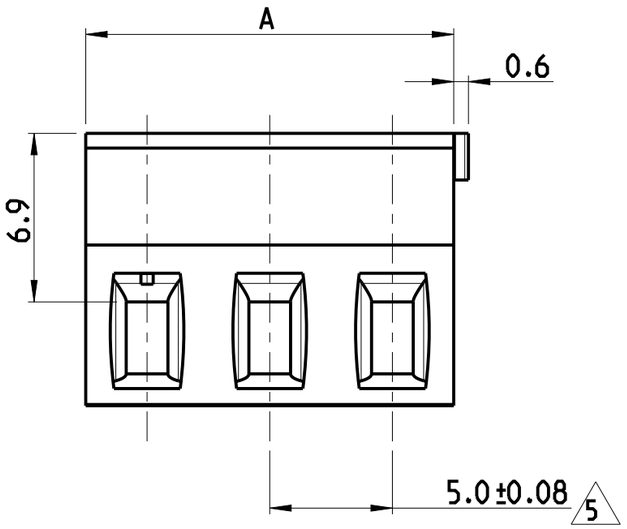

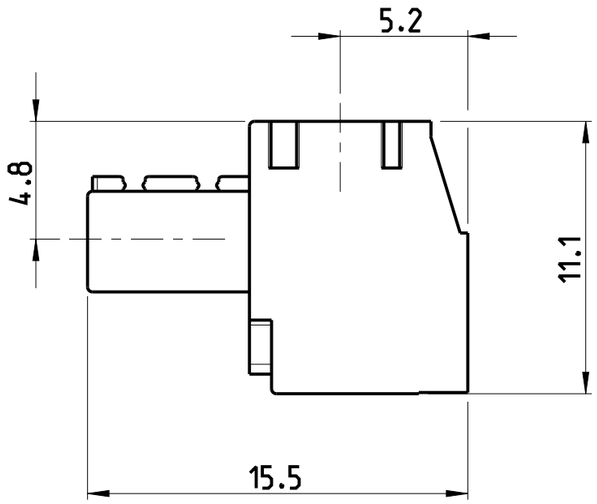

NOTES

1. MATERIALS & FINISH
   HOUSING : PA6.6 , UL94 V0. COLOR -GREEN
   SCREW M2 : PHOSPHOR BRONZE. NICKEL PLATED
   CLAMP : BRASS. NICKEL PLATED
   SPRING CONTACT : PHOSPHOR BRONZE. TIN PLATED

2. MECHANICAL
   INSERTION FORCE PER POLE : MAX 3N
   WITHDRAWAL FORCE PER POLE : MIN 1.5N
   RECOMMENDED/ HIGHEST TIGHTENING TORQUE : 0.2/0.25 Nm
   WIRE STRIPPING LENGTH: 5.0 - 6.0 mm

3. ELECTRICAL
   WIRE RANGE : 30 - 14 AWG
   VOLTAGE RATING : 300 V
   CURRENT RATING : 11 A
   CONTACT RESISTANCE : <15 m Ohm
   INSULATION RESISTANCE : > 1000 M Ohm (500V DC)

4. OPERATING TEMPERATURE RANGE: -40°c TO +110°C

5. TOLERANCE NOT CUMULATIVE

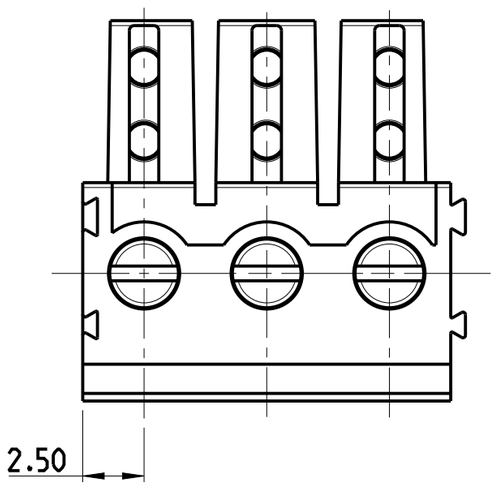

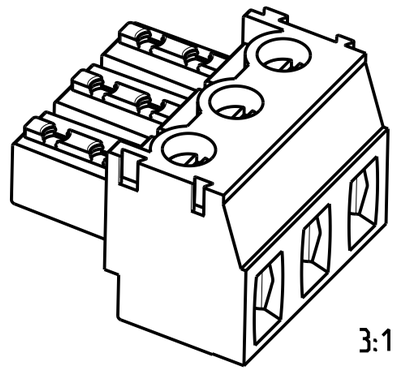

40.0	08	1986909-8
35.0	07	1986909-7
30.0	06	1986909-6
25.0	05	1986909-5
20.0	04	1986909-4
15.0	03	1986909-3
10.0	02	1986909-2
DIM "A"	NO.OF POS.	PART NUMBER

-3 AS SHOWN

THIS DRAWING IS A CONTROLLED DOCUMENT.

DIMENSIONS: mm

TOLERANCES UNLESS OTHERWISE SPECIFIED:
0 PLC ±-
1 PLC ±0.2
2 PLC ±0.15
3 PLC ±-
4 PLC ±-
ANGLES ±2°

MATERIAL: SEE NOTE 1
FINISH: SEE NOTE 1

DWN KARTHIK.J.K 06NOV2014
CHK PRASHANTH S 06NOV2014
APVD JAYANTH KUMAR 06NOV2014
PRODUCT SPEC -
APPLICATION SPEC -
WEIGHT -

CUSTOMER DRAWING

TE Connectivity

NAME: TERMINAL BLOCK PLUG 5mm MODULAR

SIZE	CAGE CODE	DRAWING NO	RESTRICTED TO
A3	-	C-1986909	-

SCALE 4:1 SHEET 1 OF 1 REV A

1470-19 (3/13)