THIS DRAWING IS UNPUBLISHED. RELEASED FOR PUBLICATION 20
© COPYRIGHT 20 BY - ALL RIGHTS RESERVED.

REVISIONS

P	LTR	DESCRIPTION	DATE	DWN	APVD
	1	NEW DRAWING	06NOV2014	NK	MM

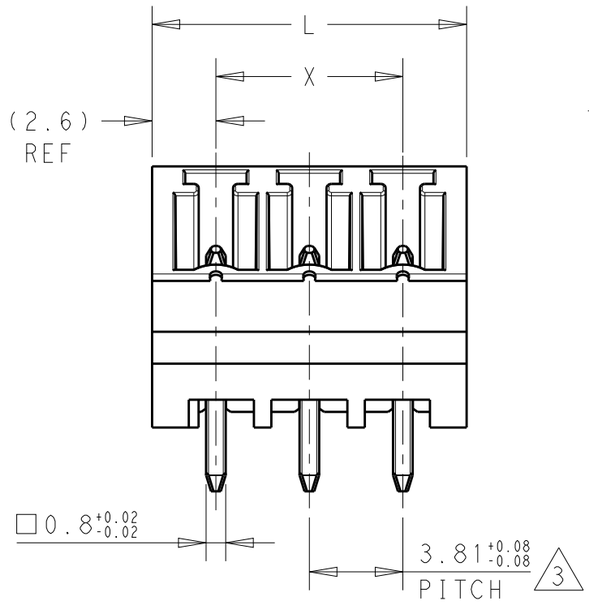

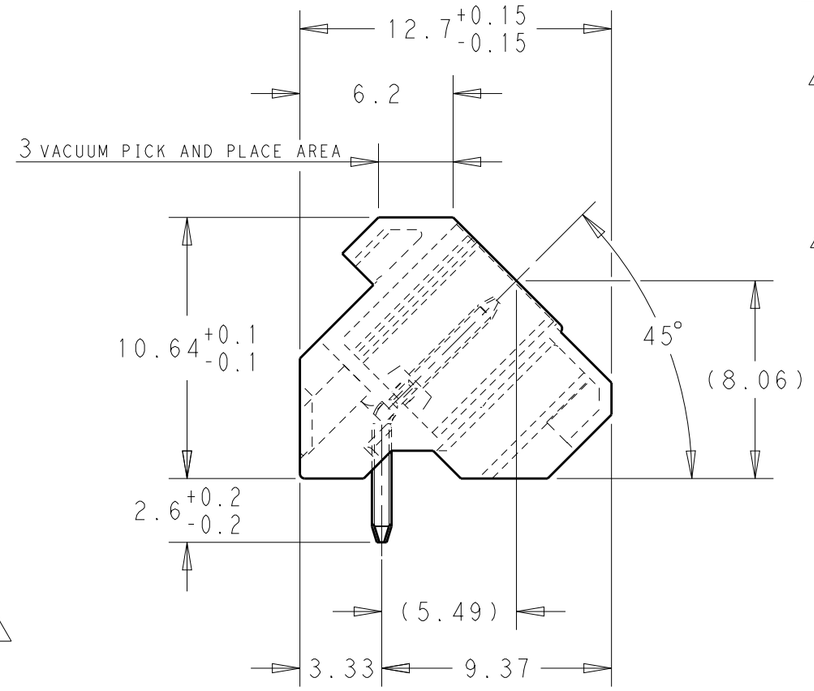

1 MATERIALS AND FINISH
HOUSING: PA 6.6, UL 94-V0, COLOR: BLACK
TERMINAL: PHOSPHOR BRONZE, TIN PLATED

2 SUITABLE FOR 1.6-2.4mm. PC BOARD THICKNESS

3 NOT CUMULATIVE TOLERANCE

PRELIMINARY - NOT RELEASED FOR PRODUCTION

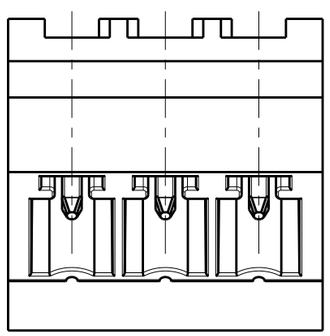

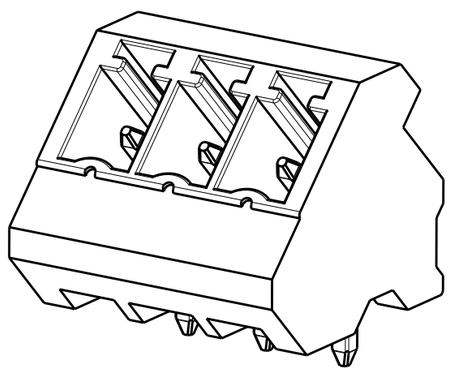

1986871-3 AS SHOWN

X	L	NO OF POS	PART NUMBER
26.67	31.87	8	1986871-8
22.86	28.06	7	1986871-7
19.05	24.25	6	1986871-6
15.24	20.44	5	1986871-5
11.43	16.63	4	1986871-4
7.62	12.82	3	1986871-3
3.81	9.01	2	1986871-2

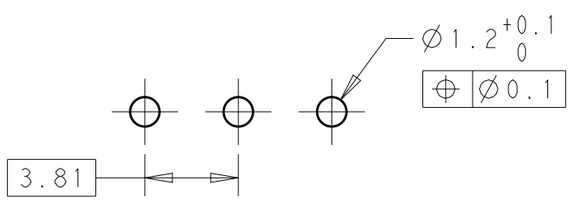

RECOMMENDED PC BOARD LAYOUT

THIS DRAWING IS A CONTROLLED DOCUMENT.

DIMENSIONS: mm

TOLERANCES UNLESS OTHERWISE SPECIFIED:
0 PLC ±-
1 PLC ±0.3
2 PLC ±0.25
3 PLC ±-
4 PLC ±-
ANGLES ±2°

MATERIAL 1

FINISH 1

DWN 06NOV2014 NAGALAKSHMI K
CHK 06NOV2014 MERCURIO, MAURIZIO
APVD 06NOV2014 MERCURIO, MAURIZIO
PRODUCT SPEC 108-20166
APPLICATION SPEC 114-20079
WEIGHT -

Customer Drawing

TE Connectivity

NAME
TERMINAL BLOCK, HEADER ASSEMBLY
45 DEGREES, CLOSED ENDS
3.81mm PITCH

SIZE	CAGE CODE	DRAWING NO	RESTRICTED TO
A3	00779	C-1986871	-

SCALE 4:1 SHEET 1 OF 1 REV 1

1470-19 (3/13)