THIS DRAWING IS UNPUBLISHED. RELEASED FOR PUBLICATION 2008
© COPYRIGHT 2008 - ALL RIGHTS RESERVED.

LOC	DIST
FK	-

REVISIONS

F	LTR	DESCRIPTION	DATE	DWN	APVD
	D2	Updated Tolerance of sensor mounting surface	24AUG2018	SPB	SP
	D3	Weight info. added in the BOM	15JUL2019	SPB	SP
	D4	customer interface surface finish details updates	23AUG2019	SPB	SP
	E	TE logo updated. Pin support. Cavity mark added	13MAR2025	SP	SKC

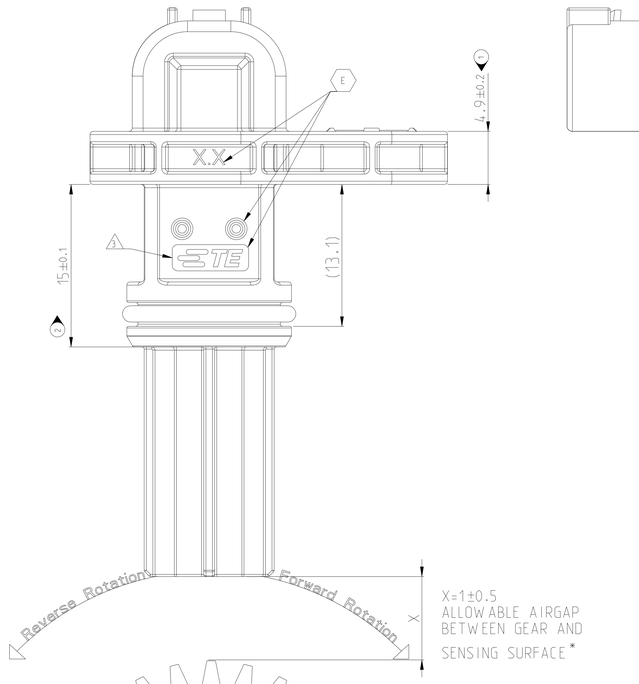

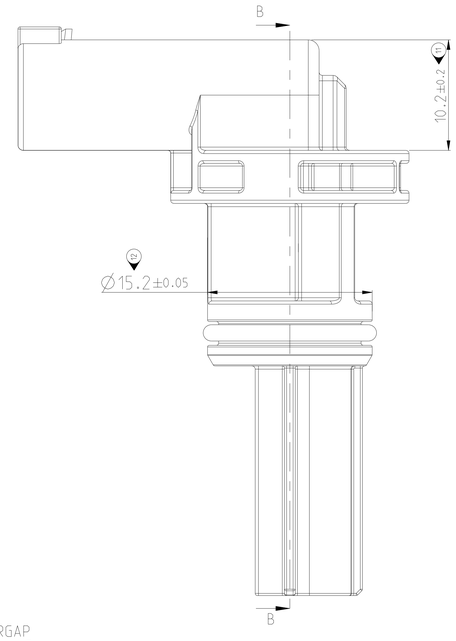

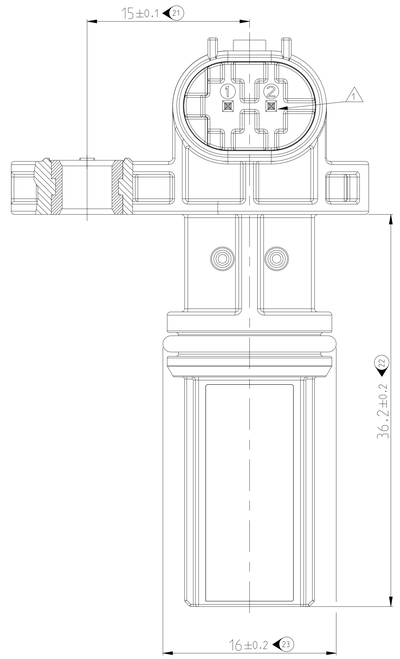

B-B

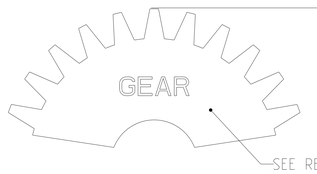

SEE REFERENCE TARGET CHARACTERISTICS

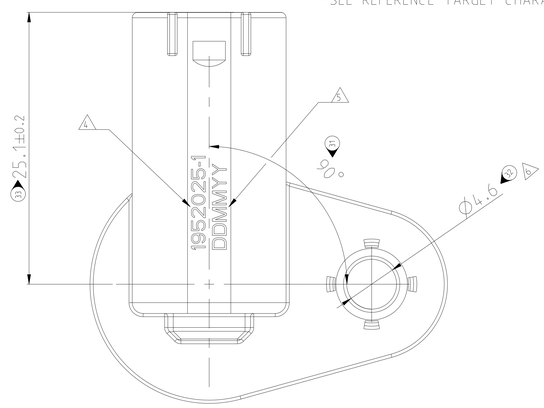

PIN ALLOCATION SCHEDULE

PIN	FUNCTION
2	OUTPUT
1	INPUT 'Icc'

1. MATING CONNECTOR TE PN 1-967644-1 CODE A. 2POS INTERFACE ACCORDING TO SPEC 114-18063-122
2. TEST ACCORDING TO EOL SPEC 109-64001
3. TE LOGO DEEPENED AND RAISED
4. TE PN - PRINTED AFTER POSITIVE EOL TEST
5. PRODUCTION DATE CODE FORMAT - DDMMYY - PRINTED AFTER POSITIVE EOL TEST
6. BUSH SUITABLE FOR M4 BOLT/SCREW

*Operational Air Gap Range is dependent on the available differential magnetic field. The available field is dependent of target geometry and material, and should be independently characterized. The field available from the Reference Target is given in the Reference Target Parameters.

SENSOR MOUNTING SURFACE DETAILS

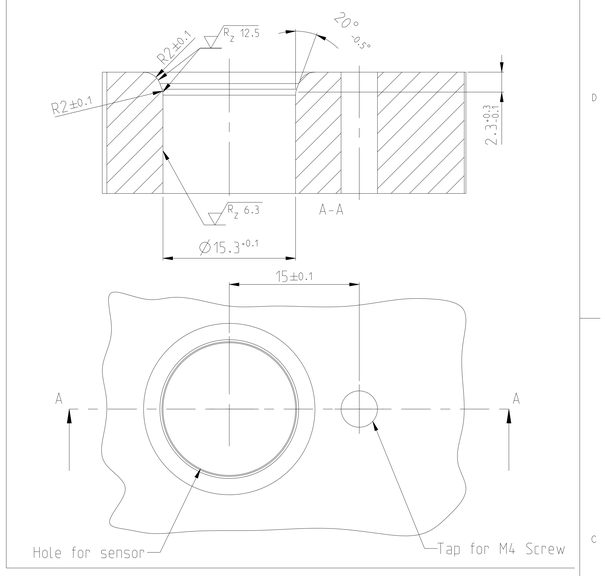

EOL TEST CHARACTERISTICS

Temperature	25+-10 °C
Supply Voltage	13.5+-0.5V
Air gap	1.5mm+-0.05mm
Reference Gearwheel	see Target Characteristics
Speed of Wheel	5000 rpm
Number of pulses	60 Tooth
Frequency	5000 Hz
Pulse forward	45 µs
Pulse reverses	90 µs
Missed pulse / revolution = ZERO	

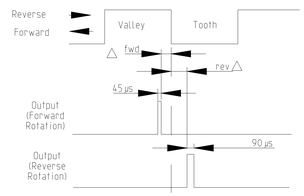

OUTPUT PULSE TIMING

APPLICATION CIRCUIT

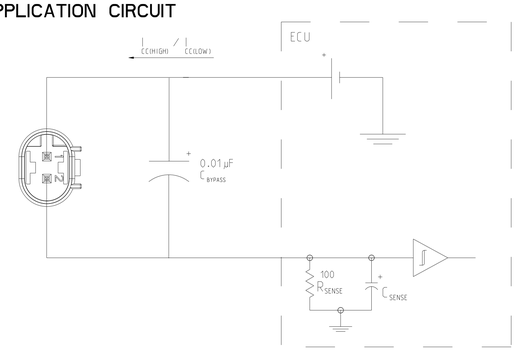

REFERENCE TARGET CHARACTERISTICS

Characterictics	Symbol	Test Conditions	Typ.	Units
Outside Diameter	D_0	Outside diameter of target	120	mm
Face Width	F	Breadth of tooth, with respect to sensor	6	mm
Circular Tooth Length	t	Length of tooth, with respect to sensor; measured at D_0	3	mm
Circular Valley Length	t_v	Length of valley, with respect to sensor; measured at D_0	3	mm
Tooth Whole Depth	h_t		3	mm
Material		Low Carbon Steel	-	-

Symbol Key

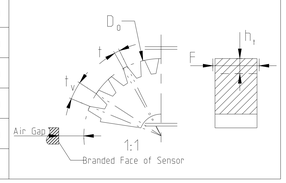

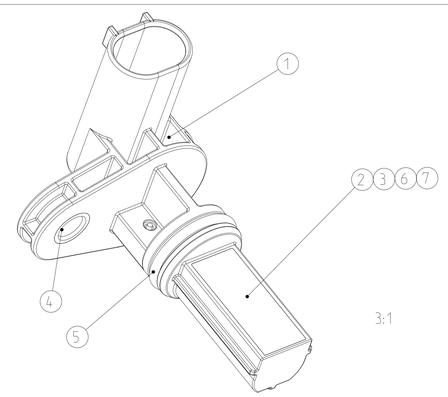

3:1

ASSY P/N	WEIGHT (g)	QTY	COLOUR	MATERIAL	DESCRIPTION	POS
1952025-1	10	-	BLACK	EPOXONIC	POTTING	7
		1	-	-	HALL IC, ATS692	6
		1	BLACK	VITON (GLT)	O-RING	5
		1	-	CuZn39Pb3	BUSH	4
		1	-	-	PCB	3
		2	-	CuFe2	CONTACT PIN	2
		1	BLACK	PA 66 GF25	SENSOR HOUSING	1

THIS DRAWING IS A CONTROLLED DOCUMENT.
DIMENSIONS: mm
TOLERANCES UNLESS OTHERWISE SPECIFIED: 0 PLC ±1°, 1 PLC ±0.5°, 2 PLC ±0.25°, 3 PLC ±0.125°, 4 PLC ±0.05°, ANGLES ±1°
MATERIAL -
FINISH -
DWN Uday M Bhat 14FEB2008
CHK Suraj Alva 14FEB2008
APVD M. Wolf -
PRODUCT SPEC 108-64012
APPLICATION SPEC 114-64004
WEIGHT 10gm
TE Connectivity
NAME SPEED SENSOR - -
SIZE A0 | CAGE CODE 00779 | DRAWING NO C-1952025 | RESTRICTED TO - -
Customer Drawing | SCALE 5:1 | SHEET 1 OF 1 | REV E

A806 (3/11)