© 2020 TE Connectivity. All Rights Reserved.

REVISIONS					
P	LTR	DESCRIPTION	DATE	DWN	APVD
	D1	REV PER ECO 08-006962	07JAN2008	DLD	WTW
	E	REVISED PER ECR 07-030366	08JAN2008	DLD	WTW
	F	REVISED PER ECO 08-006962	19MAR2008	DLD	WTW
	F1	REVISED PER ECO-20-012415	10SEP2020	AP	WW

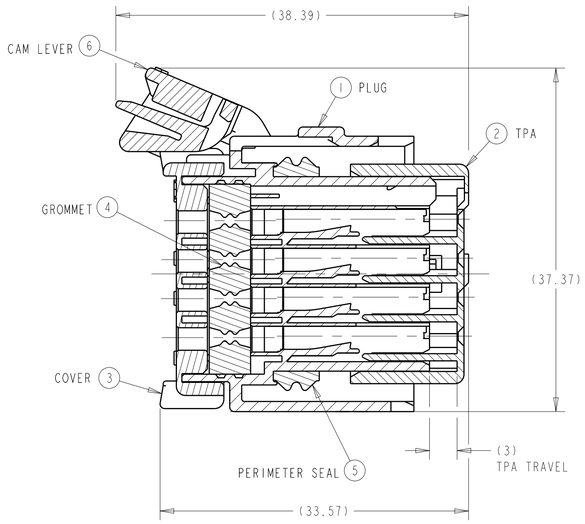

SECTION A-A
SHOWN WITH CAM LEVER
AND TPA IN THEIR
PRE-LOADED POSITIONS
(DELIVERY CONDITION)

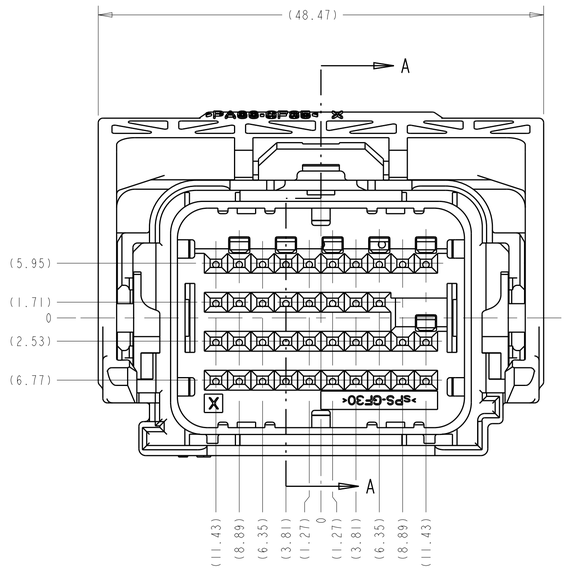

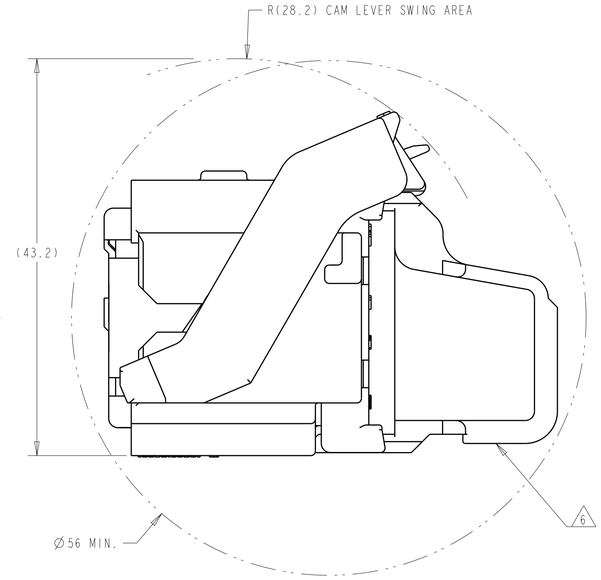

MINIMUM FEED THROUGH CONDITION
WITH 1mm CLEARANCE ALL AROUND
SHOWN WITH OPTION WIRESHIELD
TPA IS IN IT'S LOADED POSITION
CAM LEVER IS IN IT'S PRE-LOADED POSITION

KEYING OPTIONS
SCALE 2:1

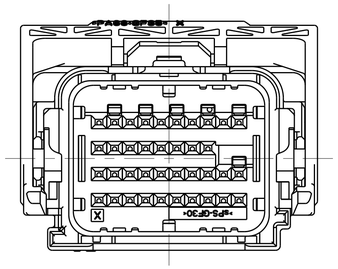

OPTION "G"

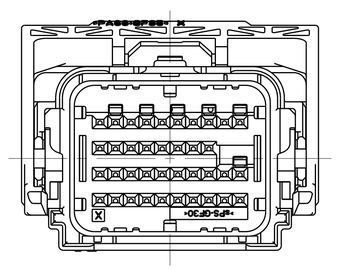

OPTION "H"

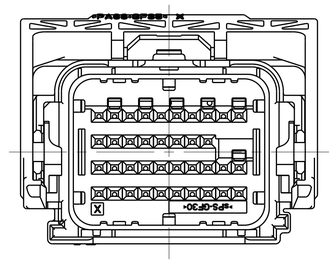

OPTION "J"

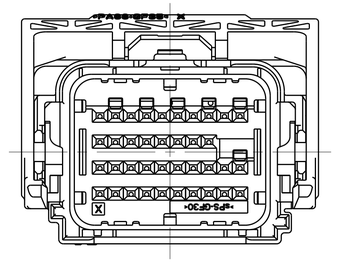

OPTION "K"

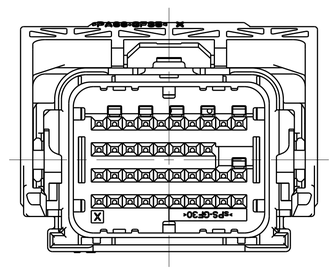

OPTION "L"

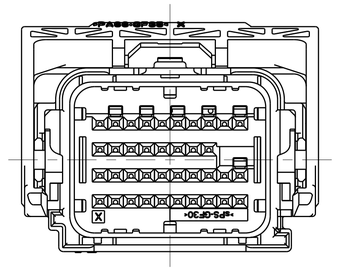

OPTION "M"

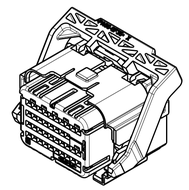

SCALE 1:1

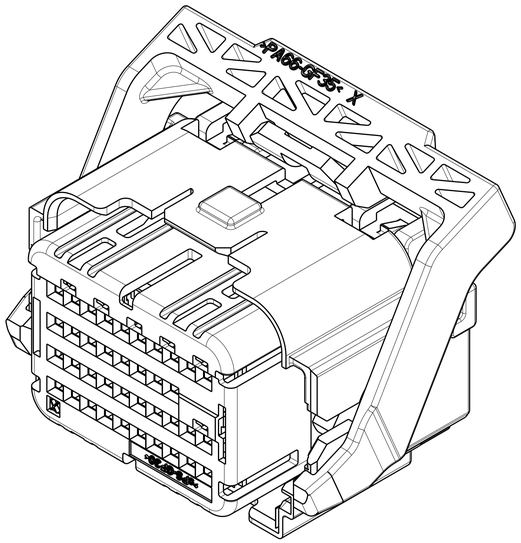

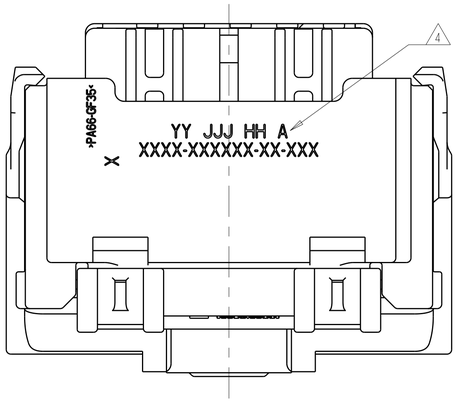

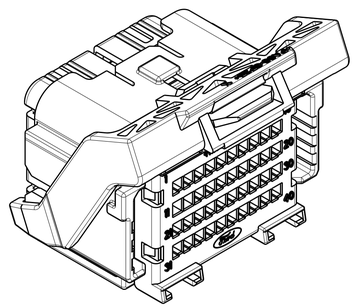

SCALE 2:1

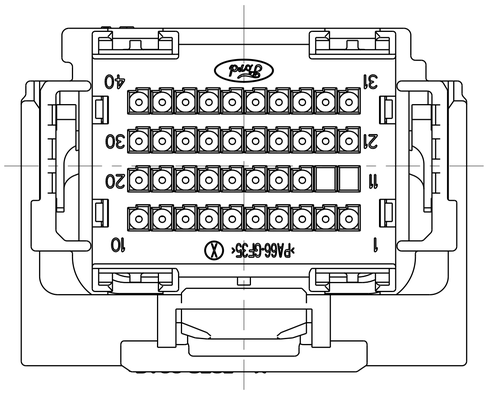

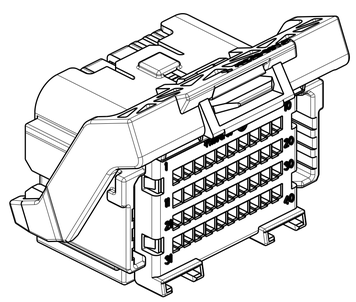

THIS VIEW SHOWS THE
MODIFIED CAM LEVER
SCALE 2:1

NOTE(S):

1. APPLICABLE TERMINAL PART NUMBERS (SOLD SEPARATELY):
   FOR TIN APPLICATIONS: 1393367 AND 1393366.
   FOR GOLD APPLICATIONS: 1393365 AND 1393364.
   FOR TERMINATION AND REELING OPTIONS
   SEE DRAWINGS 1393367, 1393366, 1393365, AND 1393364.
2. COMPATIBLE WIRE SIZES FOR MAT SEAL DESIGN 1.19 TO 2.06 O.D.
   (22-18 AWG, 0.35-0.75 mm2)
3. TPA AND CAM LEVER ARE SHIPPED IN THEIR PRE-LOADED POSITION.
   ALL ASSEMBLIES ARE TO BE TRAY PACKAGED.
4. CUSTOMER PART NUMBER AND TRACEABILITY CODE (YY = TWO DIGIT YEAR, JJJ = JULIAN DAY, HH = TWO DIGIT MILITARY HOUR, A=ASSEMBLY PROCESS USED) ARE PRINTED IN THIS LOCATION.
5. PART ASSEMBLY WEIGHT WITHOUT TERMINALS AND WITH STANDARD PIN-OUT CONFIGURATION IS 26.09 GRAMS.
6. OPTIONAL WIRESHIELD P/N 8-1419157-8 (SOLD SEPARATELY). PLEASE CONTACT YOUR TYCO ELECTRONICS SALES REPRESENTATIVE FOR AVAILABILITY AND PRICING.
7. OBSOLETE PART

KEYING OPTION "G" SHOWN
SEE SHEET 2 FOR BILL OF MATERIALS
AND SHEET 3, 4 AND 5 FOR PIN-OUT CHARTS

THIS DRAWING IS A CONTROLLED DOCUMENT.	DWN A.HOLT 14NOV2006	TE Connectivity	
DIMENSIONS: mm	CHK W.WELLINSKY 14NOV2006		
TOLERANCES UNLESS OTHERWISE SPECIFIED: 0 PLC ±- 1 PLC ±0.3 2 PLC ±0.10 3 PLC ±- 4 PLC ±- ANGLES ±3°	APVD W.WELLINSKY 14NOV2006	NAME 40 WAY SHORTING BAR ARM PLUG ASSEMBLY WITHOUT SHORTING BARS LOADED	
	PRODUCT SPEC -		
	APPLICATION SPEC -	SIZE A1 / CAGE CODE 00779 / DRAWING NO C-1924170	RESTRICTED TO
MATERIAL SEE CHART ON SHEET 2	WEIGHT SEE NOTE 5		
FINISH - -	CUSTOMER DRAWING	SCALE 3:1 / SHEET 1 OF 5	REV F1

4805 (3/13)

© 2020 TE Connectivity. All Rights Reserved.

REVISIONS					
P	LTR	DESCRIPTION	DATE	DWN	APVD
	-	SEE SHEET 1	-	-	-

6-1924170-5	6-1924170-4	6-1924170-3	6-1924170-2	6-1924170-1	6-1924170-0	5-1924170-9	5-1924170-8	5-1924170-7	5-1924170-6	5-1924170-5	5-1924170-4	5-1924170-3	5-1924170-2	5-1924170-1	5-1924170-0	4-1924170-9	4-1924170-8	4-1924170-7	4-1924170-6	4-1924170-5	4-1924170-4	4-1924170-3	4-1924170-2	4-1924170-1	4-1924170-0	3-1924170-9	3-1924170-8	3-1924170-7	3-1924170-6	3-1924170-5	3-1924170-4	3-1924170-3	3-1924170-2	3-1924170-1	3-1924170-0	2-1924170-9	2-1924170-8	2-1924170-7	2-1924170-6	2-1924170-5	2-1924170-4	2-1924170-3	2-1924170-2	2-1924170-1	2-1924170-0	1-1924170-9	1-1924170-8	1-1924170-7	1-1924170-6	1-1924170-5	1-1924170-4	1-1924170-3	1-1924170-2	1-1924170-1	1-1924170-0	0-1924170-9	0-1924170-8	0-1924170-7	0-1924170-6	0-1924170-5	0-1924170-4	0-1924170-3	0-1924170-2	~~0-1924170-1~~ 7				
1	1	1	1	1	1	1	1	1	1	1	1	1	1	1	1	1	1	1	1	1	1	1	1	1	1	1	1	1	1	1	1	1	1	1	1	1	1	1	1	1	1	1	1	1	1	1	1	1	1	1	1	1	1	1	1	1	1	1	1	1	1	1	1	1	6	CAM LEVER	PA66 35% GF	GRAY
																																																																	6	CAM LEVER WITH MODIFIED TAB	PA66 35% GF	GRAY
1	1	1	1	1	1	1	1	1	1	1	1	1	1	1	1	1	1	1	1	1	1	1	1	1	1	1	1	1	1	1	1	1	1	1	1	1	1	1	1	1	1	1	1	1	1	1	1	1	1	1	1	1	1	1	1	1	1	1	1	1	1	1	1	1	5	PERIMETER SEAL	SILICONE	GREEN
1	1	1	1	1	1	1	1	1	1	1	1	1	1	1	1	1	1	1	1	1	1	1	1	1	1	1	1	1	1	1	1	1	1	1	1	1	1	1	1	1	1	1	1	1	1	1	1	1	1	1	1	1	1	1	1	1	1	1	1	1	1	1	1	1	4	GROMMET	SILICONE	BROWN
1	1	1	1	1	1	1	1	1	1	1	1	1	1	1	1	1	1	1	1	1	1	1	1	1	1	1	1	1	1	1	1	1	1	1	1	1	1	1	1	1	1	1	1	1	1	1	1	1	1	1	1	1	1	1	1	1	1	1	1	1	1	1	1	1	3	COVER	PA66 35% GF	BLACK
1	1	1	1	1	1	1	1	1	1	1	1	1	1	1	1	1	1	1	1	1	1	1	1	1	1	1	1	1	1	1	1	1	1	1	1	1	1	1	1	1	1	1	1	1	1	1	1	1	1	1	1	1	1	1	1	1	1	1	1	1	1	1	1	1	2	TPA FOR SHORTING BAR APPLICATIONS	sPS 30% GF	NATURAL
																																																																	PLUG WITH KEYING OPTION "H" AND 6 SHORTING BAR POSITIONS CONFIGURATION	PA66 35% GF	BLACK
1	1	1	1	1	1	1	1	1	1	1	1	1	1	1	1	1	1	1	1	1	1	1	1	1	1	1	1	1	1	1	1	1	1	1	1	1	1	1	1	1	1	1	1	1	1	1	1	1	1	1	1	1	1	1	1	1	1	1	1	1	1	1	1	1	1	PLUG WITH KEYING OPTION "G" AND 6 SHORTING BAR POSITIONS CONFIGURATION	PA66 35% GF	BLACK
QUANTITY																																																																	ITEM	DESCRIPTION	MATERIAL	FINISH/COLOR

																					1-1924171-0	0-1924171-9	0-1924171-8	0-1924171-7	0-1924171-6	0-1924171-5	0-1924171-4	0-1924171-3	0-1924171-2	0-1924171-1	9-1924170-9	9-1924170-8	9-1924170-7	9-1924170-6	9-1924170-5	9-1924170-4	9-1924170-3	9-1924170-2	9-1924170-1	9-1924170-0	8-1924170-9	8-1924170-8	8-1924170-7	8-1924170-6	8-1924170-5	8-1924170-4	8-1924170-3	8-1924170-2	8-1924170-1	8-1924170-0	7-1924170-9	7-1924170-8	7-1924170-7	7-1924170-6	7-1924170-5	7-1924170-4	7-1924170-3	7-1924170-2	7-1924170-1	7-1924170-0	6-1924170-9	6-1924170-8	6-1924170-7	6-1924170-6				
																					1	1	1	1	1	1	1	1	1	1	1	1	1	1	1	1	1	1	1	1	1	1	1	1	1	1	1	1	1	1	1	1	1	1	1	1	1	1	1	1	1	1	1	1	6	CAM LEVER	PA66 35% GF	GRAY
																																																																	6	CAM LEVER WITH MODIFIED TAB	PA66 35% GF	GRAY
																					1	1	1	1	1	1	1	1	1	1	1	1	1	1	1	1	1	1	1	1	1	1	1	1	1	1	1	1	1	1	1	1	1	1	1	1	1	1	1	1	1	1	1	1	5	PERIMETER SEAL	SILICONE	GREEN
																					1	1	1	1	1	1	1	1	1	1	1	1	1	1	1	1	1	1	1	1	1	1	1	1	1	1	1	1	1	1	1	1	1	1	1	1	1	1	1	1	1	1	1	1	4	GROMMET	SILICONE	BROWN
																					1	1	1	1	1	1	1	1	1	1	1	1	1	1	1	1	1	1	1	1	1	1	1	1	1	1	1	1	1	1	1	1	1	1	1	1	1	1	1	1	1	1	1	1	3	COVER	PA66 35% GF	BLACK
																					1	1	1	1	1	1	1	1	1	1	1	1	1	1	1	1	1	1	1	1	1	1	1	1	1	1	1	1	1	1	1	1	1	1	1	1	1	1	1	1	1	1	1	1	2	TPA FOR SHORTING BAR APPLICATIONS	sPS 30% GF	NATURAL
																																																																1	PLUG WITH KEYING OPTION "H" AND 6 SHORTING BAR POSITIONS CONFIGURATION	PA66 35% GF	BLACK
																					1	1	1	1	1	1	1	1	1	1	1	1	1	1	1	1	1	1	1	1	1	1	1	1	1	1	1	1	1	1	1	1	1	1	1	1	1	1	1	1	1	1	1	1	1	PLUG WITH KEYING OPTION "G" AND 6 SHORTING BAR POSITIONS CONFIGURATION	PA66 35% GF	BLACK
																																																																ITEM	DESCRIPTION	MATERIAL	FINISH/COLOR

ASSEMBLY PART NUMBERS

																						2-1924173-1	2-1924173-0	1-1924173-9	1-1924173-8	1-1924173-7	1-1924173-6	1-1924173-5	1-1924173-4	1-1924173-3	1-1924173-2	1-1924173-1	1-1924173-0	0-1924173-9	0-1924173-8	0-1924173-7	0-1924173-6	0-1924173-5	0-1924173-4	0-1924173-3	0-1924173-2	0-1924173-1							1-1924172-6	~~1-1924172-5~~ 7	1-1924172-4	1-1924172-3	1-1924172-2	1-1924172-1	1-1924172-0	0-1924172-9	0-1924172-8	0-1924172-7	0-1924172-6	0-1924172-5	0-1924172-4	0-1924172-3	0-1924172-2	~~0-1924172~~ 7				
																																																																	6	CAM LEVER	PA66 35% GF	GRAY
																						1	1	1	1	1	1	1	1	1	1	1	1	1	1	1	1	1	1	1	1	1							1	1	1	1	1	1	1	1	1	1	1	1	1	1	1	1	6	CAM LEVER WITH MODIFIED TAB	PA66 35% GF	GRAY
																						1	1	1	1	1	1	1	1	1	1	1	1	1	1	1	1	1	1	1	1	1							1	1	1	1	1	1	1	1	1	1	1	1	1	1	1	1	5	PERIMETER SEAL	SILICONE	GREEN
																						1	1	1	1	1	1	1	1	1	1	1	1	1	1	1	1	1	1	1	1	1							1	1	1	1	1	1	1	1	1	1	1	1	1	1	1	1	4	GROMMET	SILICONE	BROWN
																						1	1	1	1	1	1	1	1	1	1	1	1	1	1	1	1	1	1	1	1	1							1	1	1	1	1	1	1	1	1	1	1	1	1	1	1	1	3	COVER	PA66 35% GF	BLACK
																						1	1	1	1	1	1	1	1	1	1	1	1	1	1	1	1	1	1	1	1	1							1	1	1	1	1	1	1	1	1	1	1	1	1	1	1	1	2	TPA FOR SHORTING BAR APPLICATIONS	sPS 30% GF	NATURAL
																						1	1	1	1	1	1	1	1	1	1	1	1	1	1	1	1	1	1	1	1	1																							1	PLUG WITH KEYING OPTION "H" AND 6 SHORTING BAR POSITIONS CONFIGURATION	PA66 35% GF	BLACK
																																																1	1	1	1	1	1	1	1	1	1	1	1	1	1	1	1	1	PLUG WITH KEYING OPTION "G" AND 6 SHORTING BAR POSITIONS CONFIGURATION	PA66 35% GF	BLACK
QUANTITY																																																																	ITEM	DESCRIPTION	MATERIAL	FINISH/COLOR

THIS DRAWING IS A CONTROLLED DOCUMENT.

DIMENSIONS: mm

TOLERANCES UNLESS OTHERWISE SPECIFIED:
0 PLC ±-
1 PLC ±0.3
2 PLC ±0.10
3 PLC ±-
4 PLC ±-
ANGLES ±3°

MATERIAL: SEE CHART ON SHEET 2

FINISH: - -

DWN A.HOLT 14NOV2006
CHK W.WELLINSKY 14NOV2006
APVD W.WELLINSKY 14NOV2006
PRODUCT SPEC -
APPLICATION SPEC -
WEIGHT SEE NOTE 5

TE Connectivity

NAME: 40 WAY SHORTING BAR ARM PLUG ASSEMBLY WITHOUT SHORTING BARS LOADED

SIZE A1 | CAGE CODE 00779 | DRAWING NO C-1924170 | RESTRICTED TO

CUSTOMER DRAWING | SCALE 3:1 | SHEET 2 OF 5 | REV F1

© 2020 TE Connectivity. All Rights Reserved.

REVISIONS				
P	LTR	DESCRIPTION	DATE	DWN	APVD
	-	SEE SHEET 1	-	-	-

PIN OUT CHART

BLANK CAVITIES INDICATE OPEN TERMINAL HOLE POSITIONS

CAVITIES WITH A NUMERIC SYMBOL INDICATE CLOSED TERMINAL HOLE POSITIONS

TERMINAL HOLE POSITION																																								ASSEMBLY PART NUMBER	KEYING OPTION
1	2	3	4	5	6	7	8	9	10	11	12	13	14	15	16	17	18	19	20	21	22	23	24	25	26	27	28	29	30	31	32	33	34	35	36	37	38	39	40		
										11	12																													~~0-1924170-1~~ △1	G
1	2	3	4	5	6	7	8	9	10	11	12	13	14	15	16	17	18			21	22					27	28	29	30					35	36	37	38	39	40	0-1924170-2	G
		3	4	5	6	7	8	9	10	11	12	13	14	15	16																			35	36	37	38	39	40	0-1924170-3	G
						7	8	9	10	11	12	13	14	15	16																			35	36	37	38	39	40	0-1924170-4	G
1	2	3	4	5	6	7	8	9	10	11	12	13	14	15	16					21	22					27	28	29	30					35	36	37	38	39	40	0-1924170-5	G
1	2	3	4	5	6	7	8	9	10	11	12	13	14										24											35	36					0-1924170-6	G
1	2	3	4	5	6	7	8	9	10	11	12	13	14	15	16								24					29	30					35	36					0-1924170-7	G
						7	8	9	10	11	12																							35	36	37	38	39	40	0-1924170-8	G
		3	4	5	6	7	8	9	10	11	12																							35	36	37	38	39	40	0-1924170-9	G
1	2	3	4	5	6	7	8	9	10	11	12	13	14	15	16											27	28	29	30					35	36	37	38	39	40	1-1924170-0	G
						7	8	9	10	11	12						18																	35	36	37	38	39	40	1-1924170-1	G
1	2	3	4			7	8	9	10	11	12	13	14	15	16					21	22					27	28	29	30					35	36	37	38	39	40	1-1924170-2	G
1	2					7	8	9	10	11	12									21	22													35	36	37	38	39	40	1-1924170-3	G
		3	4	5	6	7	8	9	10	11	12	13	14	15	16	17	18																	35	36	37	38	39	40	1-1924170-4	G
1	2	3	4			7	8	9	10	11	12	13	14	15	16	17	18			21	22					27	28	29	30					35	36	37	38	39	40	1-1924170-5	G
1	2					7	8	9	10	11	12					17	18			21	22													35	36	37	38	39	40	1-1924170-6	G
1	2	3	4	5	6	7	8	9	10	11	12	13	14	15	16	17	18			21	22	23	24	25	26	27	28	29	30	31	32	33	34	35	36	37	38	39	40	1-1924170-7	G
		3	4	5	6	7	8	9	10	11	12	13	14	15	16	17	18									27	28	29	30					35	36	37	38	39	40	1-1924170-8	G
						7	8	9	10	11	12																													1-1924170-9	G
1	2	3	4	5	6	7	8	9	10	11	12	13	14	15	16	17	18			21	22	23	24	25	26	27	28	29	30					35	36	37	38	39	40	2-1924170-0	G
1	2	3	4	5	6	7	8	9	10	11	12	13	14	15	16					21	22					27	28	29	30									39	40	2-1924170-1	G
						7	8	9	10	11	12	13	14	15	16																							39	40	2-1924170-2	G
		3	4	5	6	7	8	9	10	11	12	13	14	15	16																							39	40	2-1924170-3	G
1	2					7	8	9	10	11	12					17	18			21	22	23	24	25	26									35	36	37	38	39	40	2-1924170-4	G
1	2					7	8	9	10	11	12					17	18			21	22	23	24											35	36	37	38	39	40	2-1924170-5	G
						7	8	9	10	11	12	13	14	15	16	17	18																	35	36	37	38	39	40	2-1924170-6	G
						7	8	9	10	11	12	13	14	15	16	17	18								26									35	36	37	38	39	40	2-1924170-7	G
						7	8	9	10	11	12	13	14	15	16	17	18																					39	40	2-1924170-8	G
		3	4			7	8	9	10	11	12	13	14	15	16											27	28	29	30		32					37	38	39	40	2-1924170-9	G
										11	12																				32					37	38	39	40	3-1924170-0	G
1	2					7	8	9	10	11	12	13	14	15	16	17	18			21	22					27	28	29	30					35	36	37	38	39	40	3-1924170-1	G
1	2					7	8	9	10	11	12	13	14	15	16					21	22					27	28	29	30					35	36	37	38	39	40	3-1924170-2	G
1	2					7	8	9	10	11	12	13	14	15	16	17	18			21	22													35	36	37	38	39	40	3-1924170-3	G
1	2					7	8	9	10	11	12									21	22					27	28	29	30					35	36	37	38	39	40	3-1924170-4	G
1	2					7	8	9	10	11	12	13	14	15	16					21	22													35	36	37	38	39	40	3-1924170-5	G
1	2			5	6	7	8	9	10	11	12	13	14	15	16	17	18			21	22					27	28	29	30					35	36	37	38	39	40	3-1924170-6	G
1	2			5	6	7	8	9	10	11	12	13	14	15	16					21	22		24					29	30					35	36	37	38	39	40	3-1924170-7	G
1	2					7	8	9	10	11	12									21	22		24											35	36	37	38	39	40	3-1924170-8	G
1	2	3	4	5	6	7	8	9	10	11	12	13	14	15	16	17	18			21	22	23	24			27	28	29	30	31	32	33	34	35	36	37	38	39	40	3-1924170-9	G
										11	12							19	20				24													37	38	39	40	4-1924170-0	G
				5	6	7	8	9	10	11	12	13	14	15	16			19	20				24			27	28	29	30							37	38	39	40	4-1924170-1	G
1	2			5	6	7	8	9	10	11	12	13	14	15	16					21	22		24			27	28	29	30					35	36	37	38	39	40	4-1924170-2	G
1	2	3	4	5	6	7	8			11	12	13	14	15	16			19	20	21	22	23	24			27	28	29	30	31	32			35	36	37	38	39	40	4-1924170-3	G
1	2	3	4	5	6					11	12	13	14	15	16					21	22	23	24							31	32			35	36	37	38	39	40	4-1924170-4	G
1	2	3	4	5	6	7	8	9	10	11	12	13	14	15	16	17	18			21	22													35	36	37	38	39	40	4-1924170-5	G
1	2	3	4	5	6	7	8	9	10	11	12	13	14	15	16					21	22	23	24	25	26	27	28	29	30	31	32	33	34			37	38	39	40	4-1924170-6	G
1	2		4		6	7	8	9	10	11	12	13	14	15	16	17	18			21	22	23	24			27	28	29	30					35	36	37	38	39	40	4-1924170-7	G
1	2	3	4	5	6	7	8	9	10	11	12	13	14	15	16					21	22		24			27	28	29	30					35	36	37	38	39	40	4-1924170-8	G
1	2	3	4	5	6	7	8	9	10	11	12	13	14	15	16	17	18			21	22	23	24			27	28	29	30					35	36	37	38	39	40	4-1924170-9	G
						7	8	9	10	11	12	13	14	15	16	17	18					23	24											35	36	37	38	39	40	5-1924170-0	G
		3	4	5	6	7	8	9	10	11	12	13	14	15	16											27	28	29	30					35	36	37	38	39	40	5-1924170-1	G
						7	8	9	10	11	12												24											35	36	37	38	39	40	5-1924170-2	G
						7	8	9	10	11	12	13	14	15	16			19	20																	37	38	39	40	5-1924170-3	G
						7	8	9	10	11	12												24																5-1924170-4	G
						7	8	9	10	11	12	13	14	15	16	17	18					23	24		26									35	36	37	38	39	40	5-1924170-5	G
						7	8	9	10	11	12	13	14	15	16	17	18					23	24	25	26									35	36	37	38	39	40	5-1924170-6	G
1	2			5	6	7	8	9	10	11	12	13	14	15	16	17	18			21	22	23	24			27	28	29	30					35	36	37	38	39	40	5-1924170-7	G
								9	10	11	12				16	17	18	19							26	27	28	29					34	35	36	37	38	39	40	5-1924170-8	G
								9	10	11	12																											39	40	5-1924170-9	G
1	2	3	4	5	6	7	8	9	10	11	12	13	14	15	16					21	22					27	28	29	30		32					37	38	39	40	6-1924170-0	G
		3	4	5	6	7	8	9	10	11	12	13	14	15	16				20	21																37	38	39	40	6-1924170-1	G
		3	4	5	6	7	8	9	10	11	12	13	14	15	16																					37	38			6-1924170-2	G
		3	4	5	6	7	8	9	10	11	12	13	14	15	16											27	28	29	30							37	38			6-1924170-3	G
						7	8	9	10	11	12																				32					37	38	39	40	6-1924170-4	G
						7	8	9	10	11	12												24													37	38	39	40	6-1924170-5	G

THIS DRAWING IS A CONTROLLED DOCUMENT.

DIMENSIONS: mm

TOLERANCES UNLESS OTHERWISE SPECIFIED:
0 PLC ±-
1 PLC ±0.3
2 PLC ±0.10
3 PLC ±-
4 PLC ±-
ANGLES ±3°

MATERIAL: SEE CHART ON SHEET 2

FINISH: - / -

DWN A.HOLT	14NOV2006	
CHK W.WELLINSKY	14NOV2006	
APVD W.WELLINSKY	14NOV2006	

PRODUCT SPEC: -

APPLICATION SPEC: -

WEIGHT: SEE NOTE 5

TE Connectivity

NAME: 40 WAY SHORTING BAR ARM PLUG ASSEMBLY WITHOUT SHORTING BARS LOADED

SIZE	CAGE CODE	DRAWING NO	RESTRICTED TO
A1	00779	C-1924170	

CUSTOMER DRAWING

SCALE	SHEET	OF	REV
3:1	3	5	F1

4805 (3/13)

© 2020 TE Connectivity. All Rights Reserved.

REVISIONS					
P	LTR	DESCRIPTION	DATE	DWN	APVD
	-	SEE SHEET 1	-	-	-

PIN OUT CHART

BLANK CAVITIES INDICATE OPEN TERMINAL HOLE POSITIONS

CAVITIES WITH A NUMERIC SYMBOL INDICATE CLOSED TERMINAL HOLE POSITIONS

TERMINAL HOLE POSITION

1	2	3	4	5	6	7	8	9	10	11	12	13	14	15	16	17	18	19	20	21	22	23	24	25	26	27	28	29	30	31	32	33	34	35	36	37	38	39	40	ASSEMBLY PART NUMBER	KEYING OPTION
				5	6	7	8	9	10	11	12	13	14	15	16								24			27	28	29	30							37	37	39	40	6-1924170-6	G
		3	4	5	6	7	8	9	10	11	12	13	14	15	16	17	18					23	24		26									35	36	37	37	39	40	6-1924170-7	G
		3	4	5	6	7	8	9	10	11	12	13	14	15	16								24			27	28	29	30					35	36	37	37	39	40	6-1924170-8	G
		3	4	5	6	7	8	9	10	11	12	13	14	15	16								24											35	36	37	37	39	40	6-1924170-9	G
1	2			5	6	7	8	9	10	11	12	13	14	15	16					21	22		24			27	28	29	30							37	38	39	40	7-1924170-0	G
				5	6	7	8	9	10	11	12	13	14	15	16								24			27	28	29	30					35	36	37	38	39	40	7-1924170-1	G
1	2					7	8	9	10	11	12	13	14	15	16					21	22		24											35	36	37	38	39	40	7-1924170-2	G
1	2					7	8	9	10	11	12	13	14	15	16					21	22		24			27	28	29	30					35	36	37	38	39	40	7-1924170-3	G
										11	12												24																	7-1924170-4	G
1	2									11	12	13	14	15	16								24																	7-1924170-5	G
										11	12																				32					37	38	39	40	7-1924170-6	G
										11	12							19	20				24																	7-1924170-7	G
										11	12							19	20													33	34							7-1924170-8	G
						7	8	9	10	11	12							19	20				24																	7-1924170-9	G
						7	8	9	10	11	12							19	20													33	34							8-1924170-0	G
						7	8	9	10	11	12																			31	32					37	38	39	40	8-1924170-1	G
								9	10	11	12					17	18	19	20	21	22		24		26							33	34	35	36	37	38	39	40	8-1924170-2	G
				5	6	7	8	9	10	11	12	13	14	15	16																					37	38			8-1924170-3	G
		3	4	5	6	7	8	9	10	11	12	13	14	15	16			19	20													33	34			37	38	39	40	8-1924170-4	G
						7	8	9	10	11	12	13	14	15	16			19	20													33	34			37	38	39	40	8-1924170-5	G
1	2					7	8	9	10	11	12		14	15		17	18			21	22			25	26	27	28	29	30	31	32	33	34	35	36	37	38			8-1924170-6	G
1	2					7	8	9	10			13	14	15	16					21	22		24											35	36	37	38	39	40	8-1924170-7	G
1	2					7	8	9	10			13	14	15	16					21	22		24			27	28	29	30					35	36	37	38	39	40	8-1924170-8	G
1	2	3	4			7	8	9	10	11	12		14	15		17	18			21	22			25	26	27	28	29	30	31	32	33	34	35	36	37	38			8-1924170-9	G
1	2	3	4			7	8	9	10	11	12		14	15		17	18			21	22	23	24	25	26	27	28	29	30	31	32			35	36	37	38			9-1924170-0	G
1	2	3	4	5	6	7	8	9	10	11	12	13	14	15	16					21	22		24			27	28	29	30					35	36	37	38			9-1924170-1	G
		3	4	5	6					11	12												24											35	36	37	38	39	40	9-1924170-2	G
						7	8	9	10	11	12												24											35	36	37	38			9-1924170-3	G
										11	12												24											35	36	37	38	39	40	9-1924170-4	G
		3	4	5	6					11	12							19	20																			39	40	9-1924170-5	G
1	2	3	4	5	6	7	8	9	10	11	12	13	14	15	16			19	20	21	22	23	24		26	27	28	29	30					35	36	37	38	39	40	9-1924170-6	G
						7	8	9	10	11	12	13	14	15	16			19	20				24									33	34			37	38	39	40	9-1924170-7	G
		3	4	5	6	7	8	9	10	11	12	13	14	15	16			19	20				24									33	34			37	38	39	40	9-1924170-8	G
		3	4	5	6	7	8	9	10	11	12	13	14	15	16			19	20				24													37	38	39	40	9-1924170-9	G
						7	8	9	10	11	12	13	14	15	16			19	20				24													37	38	39	40	0-1924171-1	G
										11	12							19	20																					0-1924171-2	G
		3	4	5	6	7	8	9	10	11	12							19	20				24															39	40	0-1924171-3	G
						7	8	9	10	11	12																					33	34							0-1924171-4	G
										11	12																					33	34							0-1924171-5	G
1	2	3	4	5	6	7	8	9	10	11	12	13	14	15	16					21	22		24											35	36	37	38	39	40	0-1924171-6	G
						7	8	9	10	11	12												24											35	36					0-1924171-7	G
										11	12	13	14	15	16								24																	0-1924171-8	G
1	2	3	4	5	6	7	8	9	10	11	12	13	14	15	16			19	20	21	22	23	24		26	27	28	29	30					35	36	37	38		40	0-1924171-9	G
1	2	3	4	5	6	7	8	9	10	11	12	13	14	15	16			19	20	21			24		26	27	28	29	30					35	36	37	38	39	40	1-1924171-0	G

THIS DRAWING IS A CONTROLLED DOCUMENT.	DWN A. HOLT 14NOV2006	TE Connectivity	
DIMENSIONS: mm	CHK W. WELLINSKY 14NOV2006	NAME 40 WAY SHORTING BAR ARM PLUG ASSEMBLY WITHOUT SHORTING BARS LOADED	
TOLERANCES UNLESS OTHERWISE SPECIFIED: 0 PLC ±- ; 1 PLC ±0.3 ; 2 PLC ±0.10 ; 3 PLC ±- ; 4 PLC ±- ; ANGLES ±3°	APVD W. WELLINSKY 14NOV2006	PRODUCT SPEC -	
		APPLICATION SPEC -	SIZE A1 / CAGE CODE 00779 / DRAWING NO C-1924170 / RESTRICTED TO
MATERIAL SEE CHART ON SHEET 2	FINISH -	WEIGHT SEE NOTE 5	
		CUSTOMER DRAWING	SCALE 3:1 / SHEET 4 OF 5 / REV F1

© 2020 TE Connectivity. All Rights Reserved.

REVISIONS					
P	LTR	DESCRIPTION	DATE	DWN	APVD
	-	SEE SHEET 1	-	-	-

PIN OUT CHART

BLANK CAVITIES INDICATE OPEN TERMINAL HOLE POSITIONS

CAVITIES WITH A NUMERIC SYMBOL INDICATE CLOSED TERMINAL HOLE POSITIONS

TERMINAL HOLE POSITION																																								ASSEMBLY PART NUMBER	KEYING OPTION
1	2	3	4	5	6	7	8	9	10	11	12	13	14	15	16	17	18	19	20	21	22	23	24	25	26	27	28	29	30	31	32	33	34	35	36	37	38	39	40		
										11	12																													~~0-1924172-1~~ △7	G
1	2	3	4	5	6	7	8	9	10	11	12	13	14	15	16	17	18			21	22					27	28	29	30					35	36	37	38	39	40	0-1924172-2	G
		3	4	5	6	7	8	9	10	11	12	13	14	15	16																			35	36	37	38	39	40	0-1924172-3	G
						7	8	9	10	11	12	13	14	15	16																			35	36	37	38	39	40	0-1924172-4	G
						7	8	9	10	11	12																							35	36	37	38	39	40	0-1924172-5	G
1	2	3	4	5	6	7	8	9	10	11	12	13	14	15	16					21	22		24			27	28	29	30					35	36	37	38	39	40	0-1924172-6	G
						7	8	9	10	11	12					17	18																	35	36	37	38	39	40	0-1924172-7	G
						7	8	9	10	11	12	13	14	15	16	17	18																	35	36	37	38	39	40	0-1924172-8	G
1	2	3	4	5	6	7	8	9	10	11	12	13	14	15	16					21	22					27	28	29	30					35	36	37	38	39	40	0-1924172-9	G
						7	8	9	10	11	12												24											35	36	37	38	39	40	1-1924172-0	G
						7	8	9	10	11	12	13	14	15	16								24											35	36	37	38	39	40	1-1924172-1	G
1	2	3	4	5	6	7	8	9	10	11	12	13	14	15	16			19	20	21	22	23	24		26	27	28	29	30					35	36	37	38	39	40	1-1924172-2	G
1	2					7	8	9	10	11	12					17	18			21	22													35	36	37	38	39	40	1-1924172-3	G
		3	4	5	6					11	12												24											35	36	37	38	39	40	1-1924172-4	G
		3	4	5	6																		24											35	36	37	38	39		~~1-1924172-5~~ △7	G
		3	4	5	6					11	12												24											35	36	37	38	39		1-1924172-6	G

PIN OUT CHART

BLANK CAVITIES INDICATE OPEN TERMINAL HOLE POSITIONS

CAVITIES WITH A NUMERIC SYMBOL INDICATE CLOSED TERMINAL HOLE POSITIONS

TERMINAL HOLE POSITION																																								ASSEMBLY PART NUMBER	KEYING OPTION
1	2	3	4	5	6	7	8	9	10	11	12	13	14	15	16	17	18	19	20	21	22	23	24	25	26	27	28	29	30	31	32	33	34	35	36	37	38	39	40		
										11	12																													0-1924173-1	H
						7	8	9	10	11	12							19	20				24													37	38	39	40	0-1924173-2	H
				5	6	7	8	9	10	11	12	13	14	15	16			19	20				24			27	28	29	30							37	38	39	40	0-1924173-3	H
1	2	3	4					9	10	11	12	13	14	15	16					21	22					27	28	29	30									39	40	0-1924173-4	H
1	2	3	4	5	6	7	8	9	10	11	12	13	14	15	16					21	22	23	24	25	26	27	28	29	30	31	32	33	34			37	38	39	40	0-1924173-5	H
								9	10	11	12																											39	40	0-1924173-6	H
						7	8	9	10	11	12												24											35	36	37	38	39	40	0-1924173-7	H
						7	8	9	10	11	12												24																	0-1924173-8	H
1	2	3	4	5	6	7	8	9	10	11	12	13	14	15	16				20	21	22					27	28	29	30	31	32					37	38	39	40	0-1924173-9	H
1	2	3	4	5	6	7	8	9	10	11	12	13	14	15	16					21	22					27	28	29	30	31	32					37	38	39	40	1-1924173-0	H
1	2	3	4	5	6	7	8	9	10	11	12	13	14	15	16					21	22		24			27	28	29	30					35	36	37	38	39	40	1-1924173-1	H
1	2	3	4	5	6	7	8	9	10	11	12	13	14	15	16					21	22		24			27	28	29	30							37	38	39	40	1-1924173-2	H
								9	10	11	12					17	18	19	20	21	22		24		26							33	34	35	36	37	38	39	40	1-1924173-3	H
1	2					7	8	9	10	11	12	13	14	15	16					21	22					27	28	29	30	31	32					37	38	39	40	1-1924173-4	H
1	2	3	4	5	6	7	8	9	10	11	12	13	14	15	16	17	18			21	22					27	28	29	30					35	36	37	38	39	40	1-1924173-5	H
1	2	3	4	5	6	7	8	9	10	11	12	13	14	15	16					21	22		24			27	28	29	30					35	36	37	38			1-1924173-6	H
1	2					7	8	9	10	11	12	13	14	15	16					21	22		24			27	28	29	30					35	36	37	38	39	40	1-1924173-7	H
1	2	3	4	5	6	7	8	9	10	11	12	13	14	15	16					21		23		25	26	27	28	29	30	31	32	33	34			37	38	39	40	1-1924173-8	H
		3	4	5	6					11	12							19	20																			39	40	1-1924173-9	H
		3	4	5	6					11	12							19	20				24															39		2-1924173-0	H
		3	4	5	6					11	12							19	20				24															39	40	2-1924173-1	H

THIS DRAWING IS A CONTROLLED DOCUMENT.	DWN A.HOLT 14NOV2006	TE Connectivity	
DIMENSIONS: mm	CHK W.WELLINSKY 14NOV2006		
TOLERANCES UNLESS OTHERWISE SPECIFIED: 0 PLC ±- ; 1 PLC ±0.3 ; 2 PLC ±0.10 ; 3 PLC ±- ; 4 PLC ±- ; ANGLES ±3°	APVD W.WELLINSKY 14NOV2006	NAME 40 WAY SHORTING BAR ARM PLUG ASSEMBLY WITHOUT SHORTING BARS LOADED	
	PRODUCT SPEC -		
	APPLICATION SPEC -	SIZE A1 / CAGE CODE 00779 / DRAWING NO C-1924170	RESTRICTED TO
MATERIAL SEE CHART ON SHEET 2	FINISH - -	WEIGHT SEE NOTE 5	
		CUSTOMER DRAWING	SCALE 3:1 / SHEET 5 OF 5 / REV F1