THIS DRAWING IS UNPUBLISHED. RELEASED FOR PUBLICATION 20
© COPYRIGHT 20 BY TYCO ELECTRONICS CORPORATION. ALL RIGHTS RESERVED.

LOC	DIST
DS	–

REVISIONS

P	LTR	DESCRIPTION	DATE	DWN	APVD
	A	RELEASED	07AUG08	IS	HG

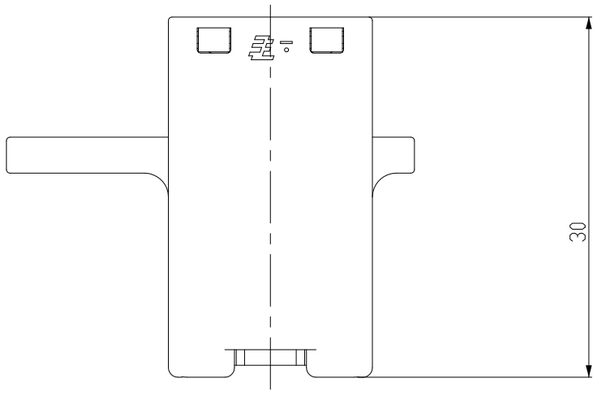

SHAPE OF CONVERSION TYPE

0-1897695-2 (BLACK)	1-1897695-3 (GRAY)
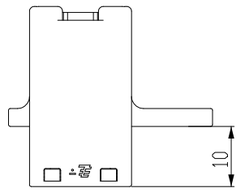	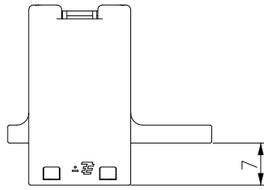

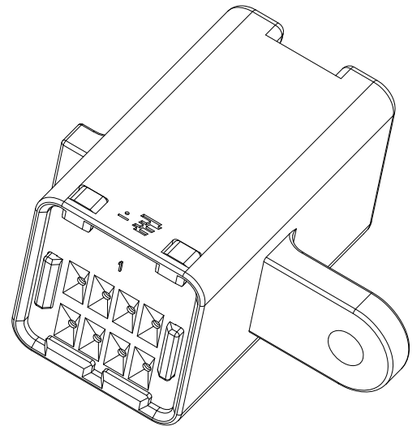

ISO VIEW

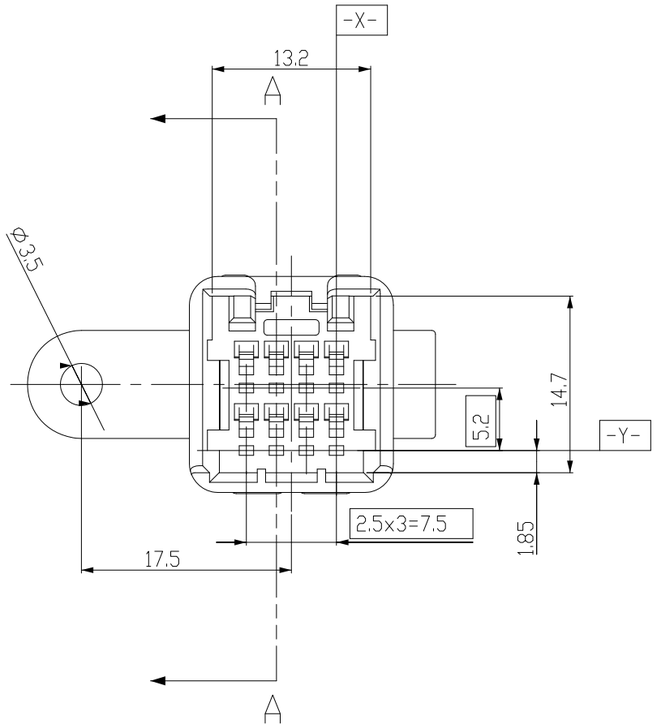

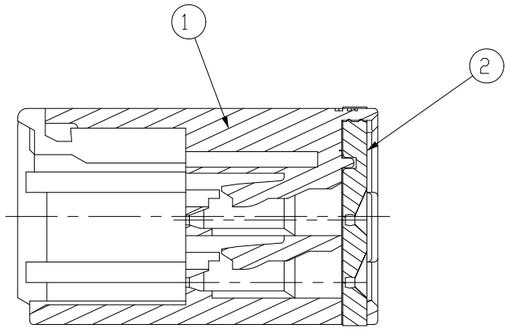

SECTION A-A

NOTE
1.GENERAL TOLERANCE: ±0.3 ±3°
2.APPLICABLE TML P/N: 0-1897724-1 ONLY

NO	COLOR	MATERIAL	DESCRIPTION	P/N	Q'TY 0-1897695-2	Q'TY 1-1897695-3	ASS'Y P/N
2	ORANGE	SILICONE	FAMILY SEAL	0-2005887-1	1	1	
1	GRAY	PBT	.040 8P CAP HSG	1-1897696-3	–	1	
1	BLACK	PBT	.040 8P CAP HSG	0-1897696-2	1	–	

THIS DRAWING IS A CONTROLLED DOCUMENT FOR TYCO ELECTRONICS CORPORATION IT IS SUBJECT TO CHANGE AND THE CONTROLLING ENGINEERING ORGANIZATION SHOULD BE CONTACTED FOR THE LATEST REVISION.

DIMENSIONS: mm

3RD ANGLE PROJECTION

TOLERANCES UNLESS OTHERWISE SPECIFIED:
0 PLC ±
1 PLC ±
2 PLC ±
3 PLC ±
4 PLC ±
ANGLES ±

MATERIAL SEE TABLE

FINISH –

DWN IS SHIN
CHK YM CHOI
APVD HG CHO
PRODUCT SPEC –
APPLICATION SPEC –
WEIGHT –

Tyco Electronics
Tyco Electronics
Kyungsan Korea

NAME .040 8PIN CAP ASSEMBLY FAMILY SEAL TYPE

SIZE	CAGE CODE	DRAWING NO	RESTRICTED TO
A3	00779	C-1897695	–

CUSTOMER DRAWING

SCALE	SHEET	OF	REV
2:1	1	1	A