THIS DRAWING IS UNPUBLISHED. RELEASED FOR PUBLICATION 20
© COPYRIGHT 20 BY TYCO ELECTRONICS CORPORATION. ALL RIGHTS RESERVED.

LOC	DIST
DS	–

REVISIONS

P	LTR	DESCRIPTION	DATE	DWN	APVD
	B	REVISED (ECR-14-005046)	11.JUL.'14	SJ	HG

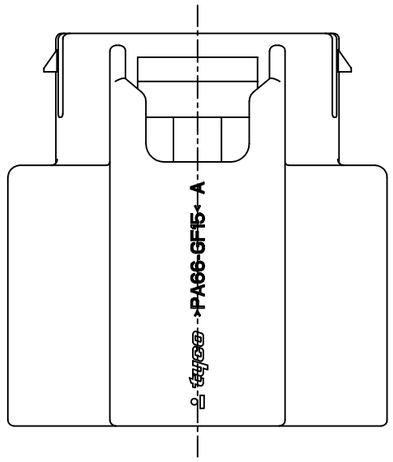

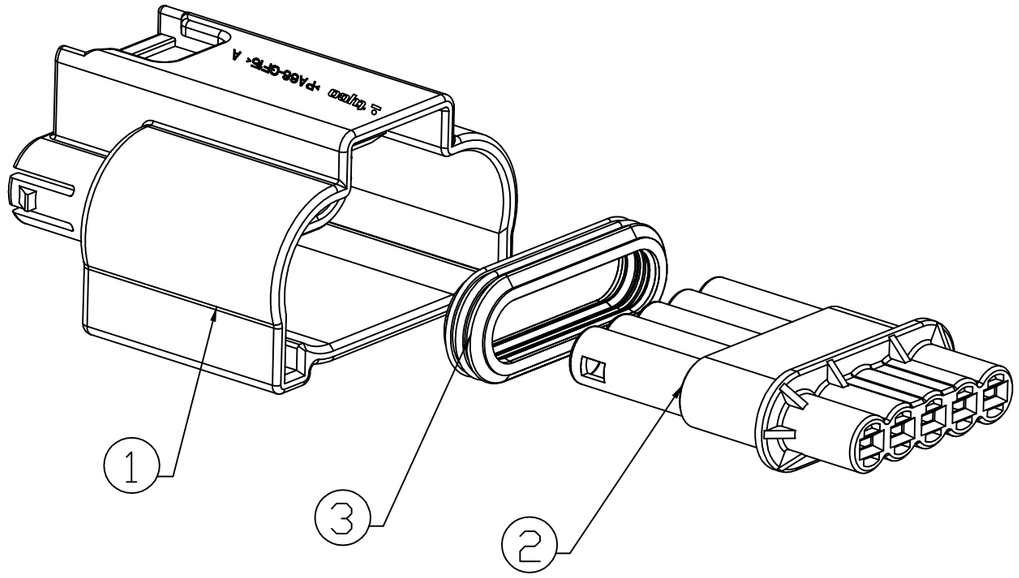

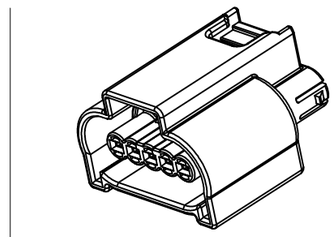

ISOMETRIC VIEW

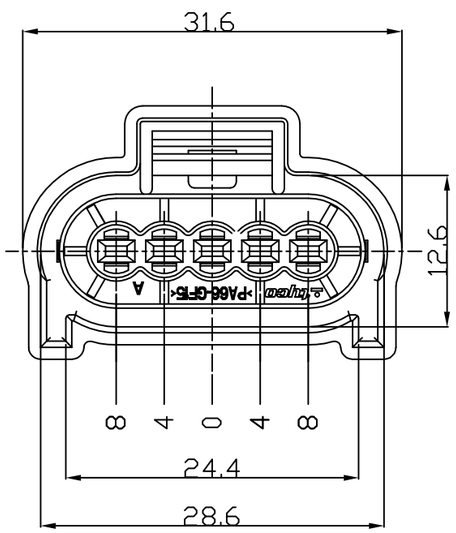

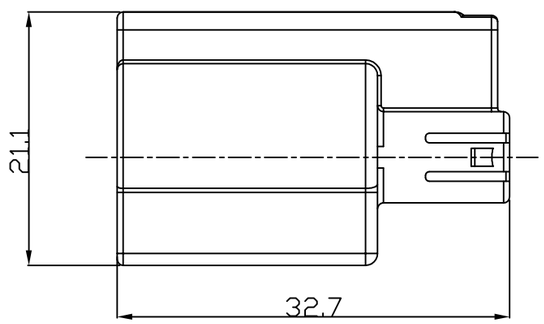

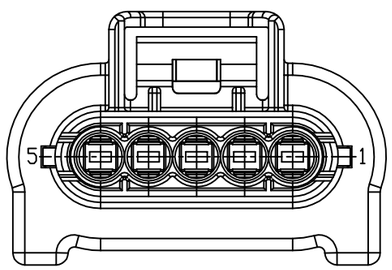

TABLE 2.

TAPE	PART NO.	INSULASION DIA. (mm)	COLOR
MCP1.5	1718705-1	0.9 - 1.2	GREEN
	964971-1	1.2 - 1.6	RED
	963530-1	1.4 - 1.9	GREY
	964972-1	1.9 - 2.3	YELLOW
	963531-1	CAVITY PLUG	WHITE

TABLE 1.

TAPE	PART NO.	WIRE RANGE (mm)	INSULASION DIA. (mm)	FINISH
MCP1.5	1241378-1	0.2 - 0.35	1.1 - 1.4	CuNiSi, Tin
	1241378-2			CuNiSi, Gold
	1241378-3			CuNiSi, Silver
	1241380-1	0.5 - 1.0	1.4 - 2.1	CuNiSi, Tin
	1241380-2			CuNiSi, Gold
	1241380-3			CuNiSi, Silver
	1418884-1	>1.0 - 1.5	2.2 - 2.4	CuNiSi, Tin
	1418884-2			CuNiSi, Gold
	1418884-3			CuNiSi, Silver

NOTE ;

1. GENERAL TOLERANCE : ±0.3, ±3.0°
2. THE MATING CONNECTOR: 1897207-2
3. APPLICABLE RECETACLE CONTACT P/N: TABLE 1.
4. APPLICABLE WIRE SEAL P/N: TABLE 2

1.5 MCP 5P PLUG ASS'Y — DESCRIPTION

1897208-1 — ASS'Y P/N

NO.	DESCRIPTION	MATERIAL	COLOR	Q'TY
3	SEAL	SILICON	ORANGE	1
2	SUB PLUG HS'G	PA66-GF15	BLACK	1
1	MAIN PLUG HS'G	PA66-GF15	BLACK	1

THIS DRAWING IS A CONTROLLED DOCUMENT FOR TYCO ELECTRONICS CORPORATION. IT IS SUBJECT TO CHANGE AND THE CONTROLLING ENGINEERING ORGANIZATION SHOULD BE CONTACTED FOR THE LATEST REVISION.

DIMENSIONS: MM

TOLERANCES UNLESS OTHERWISE SPECIFIED:

0 PLC	±-
1 PLC	±0.5
2 PLC	±0.13
3 PLC	±0.013
4 PLC	±0.0001
ANGLES	±-

MATERIAL: SEE TABLE

FINISH:

DWN: SJ CHOI
CHK: JW JUNG
APVD: HG CHO
PRODUCT SPEC:
APPLICATION SPEC:
WEIGHT:

TE Connectivity

NAME: MCP 1.5 5P PLUG ASSY

SIZE	CAGE CODE	DRAWING NO	RESTRICTED TO
A3	00779	C-1897208	–

CUSTOMER DRAWING | SCALE 2:1 | SHEET 1 OF 1 | REV B