THIS DRAWING IS UNPUBLISHED. DIFFUSION RESTREINTE
RELEASED FOR PUBLICATION LIBRE A LA DIFFUSION
© COPYRIGHT copyright, dBYe-
ALL RIGHTS RESERVED. TOUS DROITS RESERVES.

REVISIONS

P	LTR REV	DESCRIPTION MODIFICATIONS	DATE	DWN DESS.	APVD APP.
	A	NEW DRAWING	18AUG2014	MN	XR
	B	DRAWING CORRECTION	02FEB2017	DB	XR

COUPE / SECTION C-C

VUE SELON D / VIEW D

PARTIE SUPERIEURE DU PORTE-MODULE SEUL / UPPER SIDE (CARRIER ONLY)

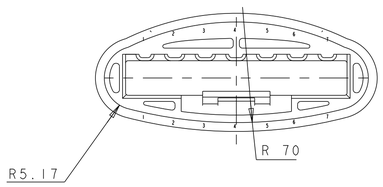

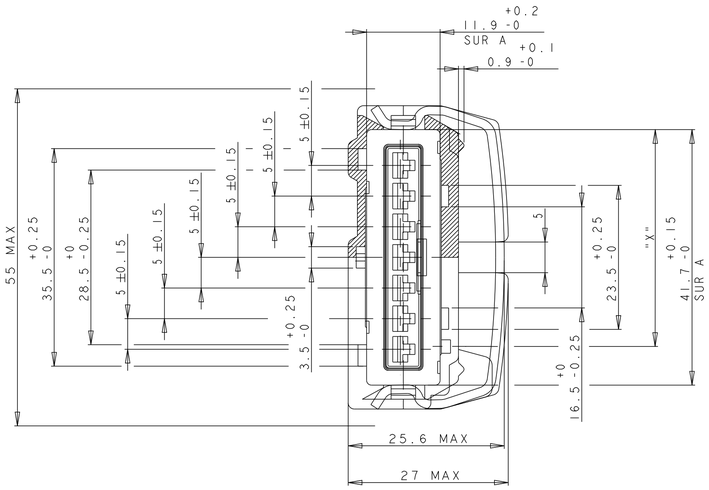

SPECIFICATION D'UTILISATION / INSTRUCTION SHEET : 411-15500

SPECIFICATION D'EMBALLAGE / PACKING SPECIFICATION : 107.15127

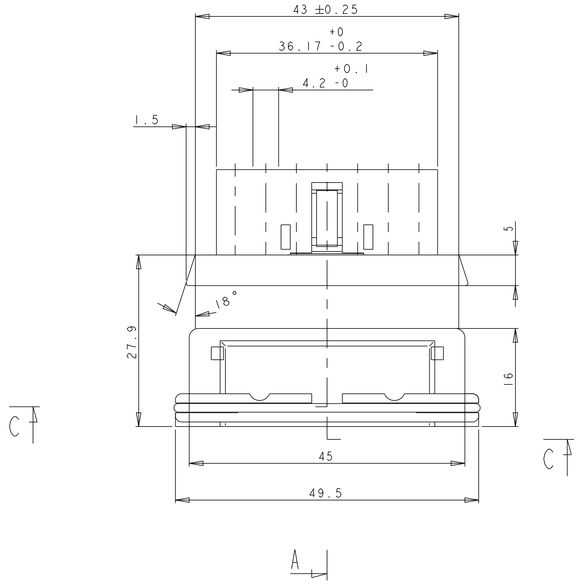

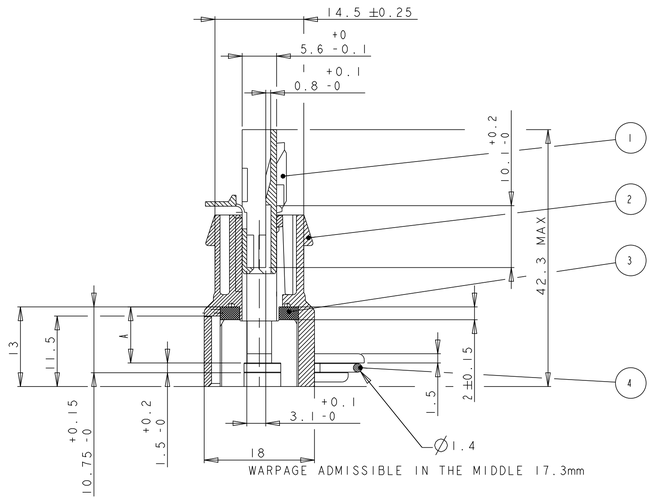

WARPAGE ADMISSIBLE IN THE MIDDLE 17.3mm

COUPE / SECTION A-A

185884-							COULEUR / COLOR	DETROMPAGE / CODING "X"	QTE/ QTY	DESCRIPTION	REP.
X	X	X	X	X	X	X	BRUT		1	RESSORT TRAITE: FIL CLAIR (INOX 18/9) LUBRIFICATION TRAIT. THERMIQUE	4
X	X	X	X	X	X	X	NATUREL		1	JOINT / SEAL (SILICONE)	3
X							VIOLET	35.4 / 20.9 / 25.1 / 16.7 / 6.4		PORTE MODULE / CARRIER (PA 6.6 GV20)	2
	X						BLANC / WHITE	35.4	1		
		X					GRIS / GREY	20.9	1		
			X				BLEU / BLUE	25.1	1		
				X			VERT / GREEN	16.7	1		
					X		MARRON / BROWN	6.4	1		
						X	NOIR / BLACK	AUCUN DETROMPAGE	1		
X	X	X	X	X	X	X	VIOLET		1	MODULE 7POS. (PA 6.6) 144470-1	1

THIS DRAWING IS A CONTROLLED DOCUMENT.	DWN /DESSINE MADHUSUDHAN N 18AUG2014	TE Connectivity					
DIMENSIONS: mm	CHK /VERIFIE E. CHATELUS 18AUG2014	NAME TITRE CONNECTEUR ETANCHE 7 VOIES POUR JPT ASSY OF SEALED JPT CONNECTOR 7 POS.					
TOLERANCES UNLESS OTHERWISE SPECIFIED: TOLERANCES NON SPECIFIEES (SUIV NB DE DECIMALES): 0 PLC/DEC: ±- 1 PLC/DEC: ±0.2 2 PLC/DEC: ±- 3 PLC/DEC: ±- 4 PLC/DEC: ±- ANGLES ±2°	APVD /APPROUVE X. ROUILLARD 18AUG2014						
	PRODUCT SPEC SPEC. PRODUIT 108-15074						
	APPLICATION SPEC SPEC. APPLICATION 114-15050/51	SIZE FORMAT A1	CAGE CODE 00779	DRAWING NO No PLAN C-185884		RESTRICTED TO RESERVE A -	
MATERIAL /MATIERE SEE TABLE -	FINISH /FINITION SEE TABLE -	WEIGHT MASSE APPROX. 14.145g					
		CUSTOMER DRAWING /PLAN CLIENT	UNIQUEMENT POUR REFERENCE	SCALE ECHELLE 2:1	SHEET FEUILLE 1 OF DE 1	REV B	

4805 (3/13)