THIS DOCUMENT IS CONFIDENTIAL. PROPERTY OF AMP INCORPORATED. PREPARED FOR PUBLICATION .19
(C) COPYRIGHT 19 BY AMP INCORPORATED. ALL RIGHTS RESERVED. (USA, RESERVED)

REVISIONS				
LTR REV	DESCRIPTION MODIFICATIONS	DATE	DWN DESS	APVD APP
–	–	–	–	–
–	–	–	–	–

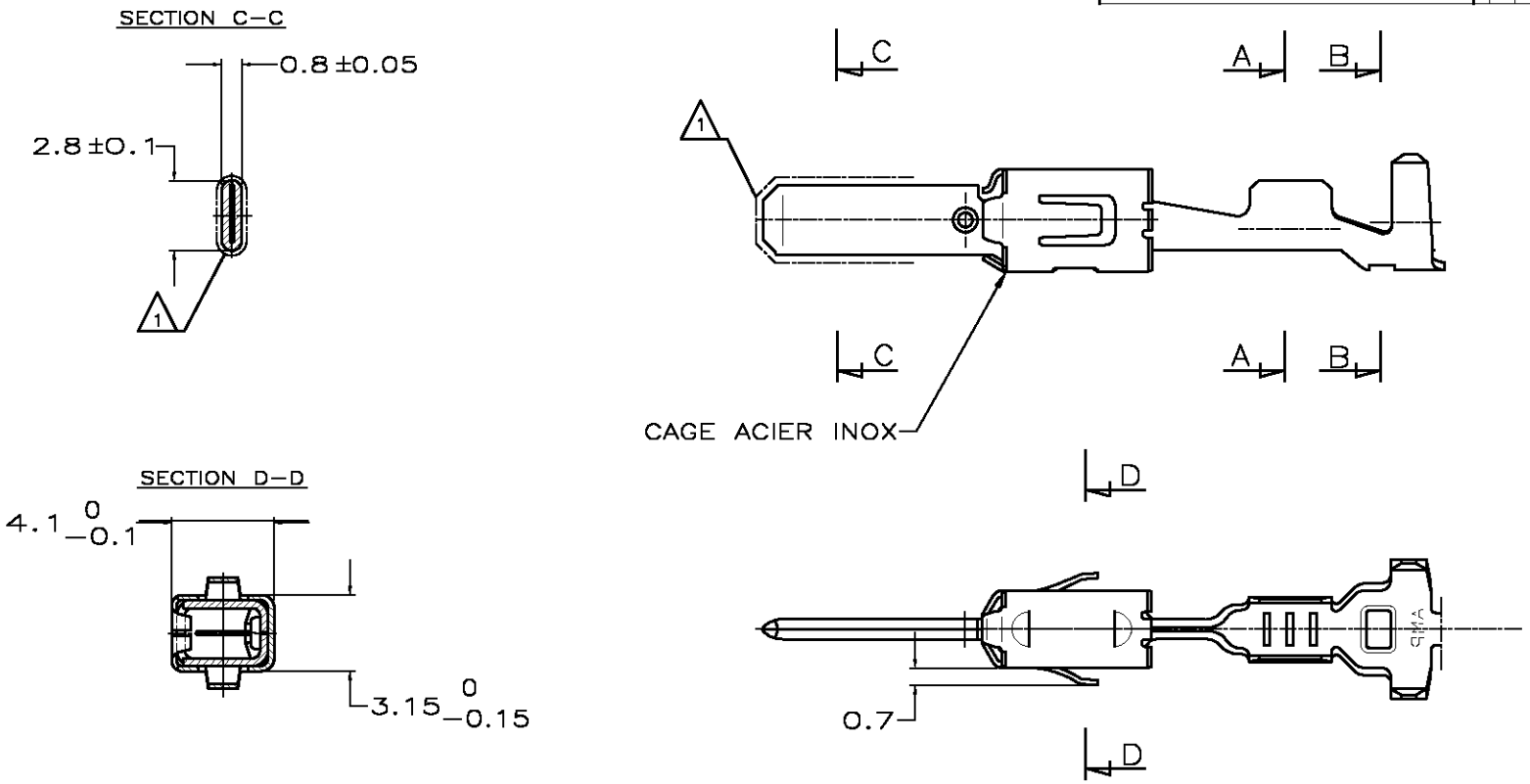

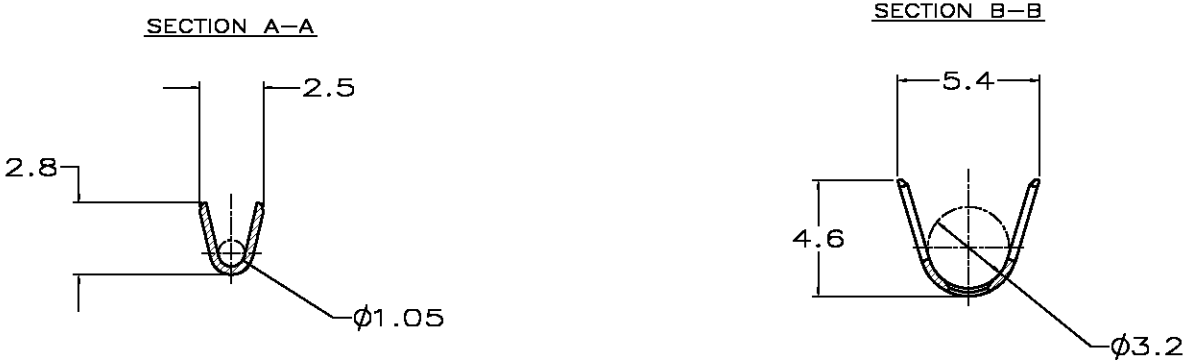

–	–	–
–	–	–
–	–	–
185028–3	dore etame 0.8 µm min	CuSn4
185028–1	pre etame	CuSn4
REF AMP	FINITION	MATIERE

THIS DRAWING IS A CONTROLLED DOCUMENT.
CE PLAN EST UN DOCUMENT CONTROLE.

DIMENSIONS: mm

UNLESS OTHERWISE SPECIFIED TOLERANCES NON SPECIFIEES
DRAW. NO. DIMENSIONS
DIMENSIONS ±0.2
ANGLES ±1°

MATERIAL MATIERE –
FINISH FINITION –

DWN/DESSINE T.MEZIN 27-JAN-03
CH. DRAW. JP.PICAUD 22-APR-03
APVD/APPROUVE D.MIVI 22-APR-03
PRODUCT SPEC. PRODUIT 108-15118
APPLICATION SPEC. SPEC. APPLICATION 114-18076
WEIGHT MASSE APPROX. 0.6 gr

AMP DE FRANCE
95301 PONTOISE

TITLE TITRE: LANGUETTE 2.8 x 0.8 MM

SIZE FORMAT A1 | CAGE CODE 00779 | DRAWING NO TYPE C-185028 | RESTRICTED TO

CUSTOMER DRAWING | SCALE ECHELLE 10:1 | SHEET FEUILLE 1 OF DE 1 | REV A