THIS DRAWING IS UNPUBLISHED.
DIFFUSION RESTREINTE

RELEASED FOR PUBLICATION 20
LIBRE A LA DIFFUSION

© COPYRIGHT 20 BY TYCO ELECTRONICS CORPORATION. ALL RIGHTS RESERVED.
TOUS DROITS RESERVES

| LOC | DIST |
|---|---|
| FH | 2 |

REVISIONS

| P | LTR REV | DESCRIPTION MODIFICATIONS | DATE | DWN DESS. | APVD APP. |
|---|---|---|---|---|---|
| | 0 | CREATION | 14OCT2004 | NA | AD |

| BSMU-95/240-34-L440 | 7-1201756-1 | F90026-000 |
|---|---|---|
| DESCRIPTION | PART NUMBER | RPN |

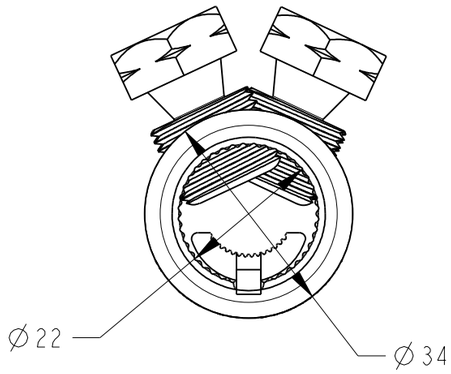


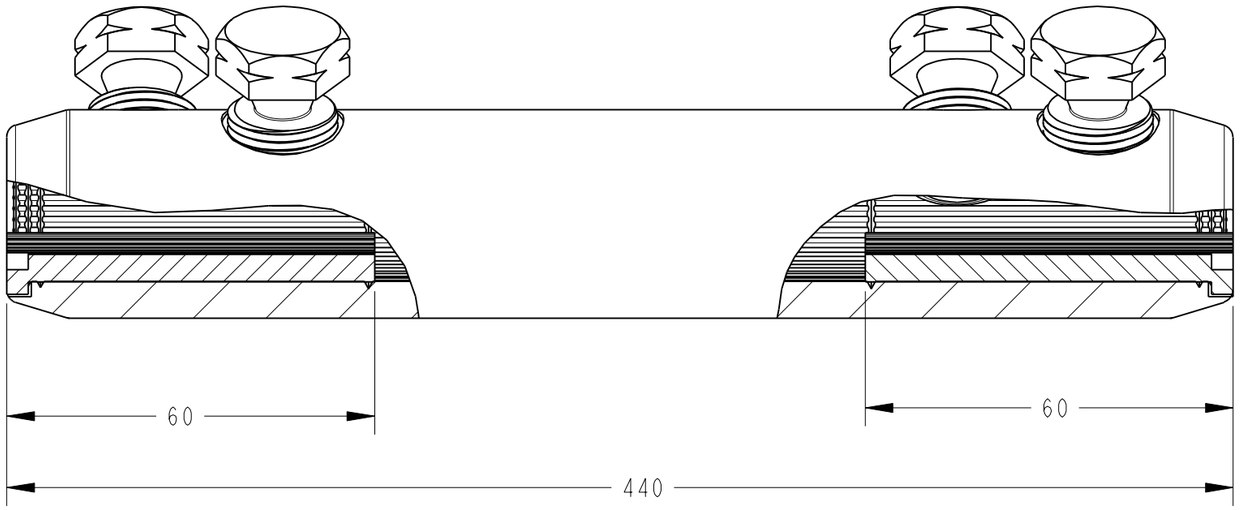


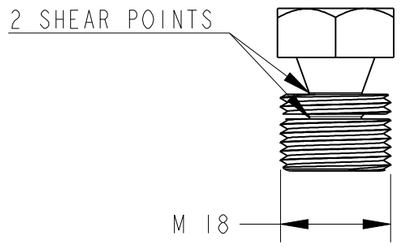


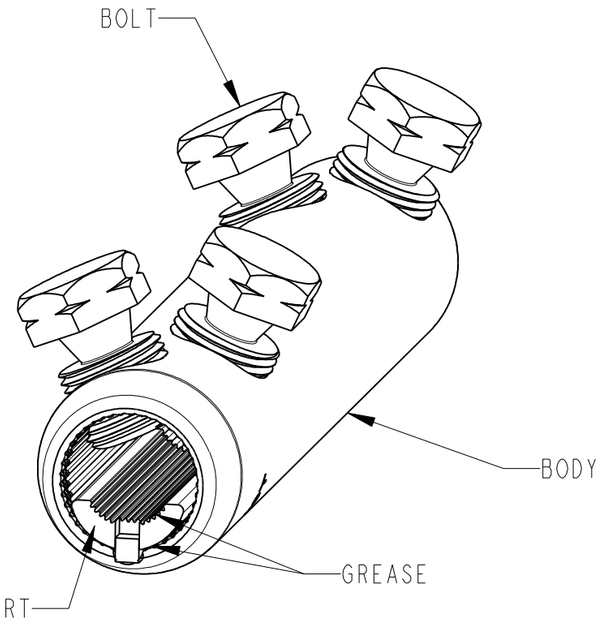


| | | AL | | | | CU | |
|---|---|---|---|---|---|---|---|
| | | RM ROUND STRANDED | RE ROUND SOLID | SM SECTOR STRANDED | SE SECTOR SOLID | RM ROUND STRANDED | SM SECTOR STRANDED |
| CONDUCTOR CROSS-SECTION QUERSCHNITTSBEREICH | mm² | 95 - 240 | 95 - 240 | 95 - 150 185-240 with rounding | 95 - 185 | 95 - 240 | 95 - 150 185-240 with rounding |
| CONDUCTOR DIAMETER LEITERDURCHMESSER | mm | Ø11 - Ø20.8 | Ø10.5 - Ø18 | - | - | Ø11 - Ø19.2 | - |

TOLERANCES UNLESS OTHERWISE SPECIFIED -
TOLERANCES NON SPECIFIEES: -

THIS DRAWING IS A CONTROLLED DOCUMENT FOR TYCO ELECTRONICS CORPORATION IT IS SUBJECT TO CHANGE AND THE CONTROLLING ENGINEERING ORGANIZATION SHOULD BE CONTACTED FOR THE LATEST REVISION.
CE PLAN EST UN DOCUMENT CONTROLE PAR TYCO ELECTRONICS CORPORATION IL EST SUSCEPTIBLE D'ETRE REVISE. CONTACTER LE SERVICE TECHNIQUE POUR OBTENIR LA DERNIERE REVISION.

DIMENSIONS: mm

TOLERANCES UNLESS OTHERWISE SPECIFIED:
TOLERANCES NON SPECIFIEES (SUIV NB DE DECIMALES):
0 PLC/DEC: ±0
1 PLC/DEC: ±0
2 PLC/DEC: ±0
3 PLC/DEC: ±0
4 PLC/DEC: ±0
ANGLES ±-

MATERIAL MATIERE: AL ALLOY
FINISH FINITION: TINNED

DWN/DESSINE: N.ALMEIDA 14OCT2004
CHK/VERIFIE: R.BUTHIOT -
APVD/APPROUVE: A.DUPONT -
PRODUCT SPEC SPEC. PRODUIT: -
APPLICATION SPEC SPEC. APPLICATION: -
WEIGHT MASSE APPROX.: 350 g

tyco Electronics
SIMEL
21220 Gevrey-Chambertin, FRANCE

NAME TITRE: - BSMU-95/240-34-L440 -

| SIZE FORMAT | CAGE CODE | DRAWING NO No PLAN | RESTRICTED TO RESERVE A |
|---|---|---|---|
| A3 | 00779 | C-1830143 | - |

CUSTOMER DRAWING /PLAN CLIENT UNIQUEMENT POUR REFERENCE | SCALE ECHELLE : | SHEET FEUILLE | OF DE | REV 0