THIS DRAWING IS UNPUBLISHED. RELEASED FOR PUBLICATION 2012
© COPYRIGHT 2012 TE Connectivity ALL RIGHTS RESERVED.

LOC	DIST
A1	–

REVISIONS

P	LTR	DESCRIPTION	DATE	DWN	APVD
	A	NEW DRAWING	27AUG2012	LN	OF
	D	SEE PCN: E-15-010248	08JUL2015	FF	OF

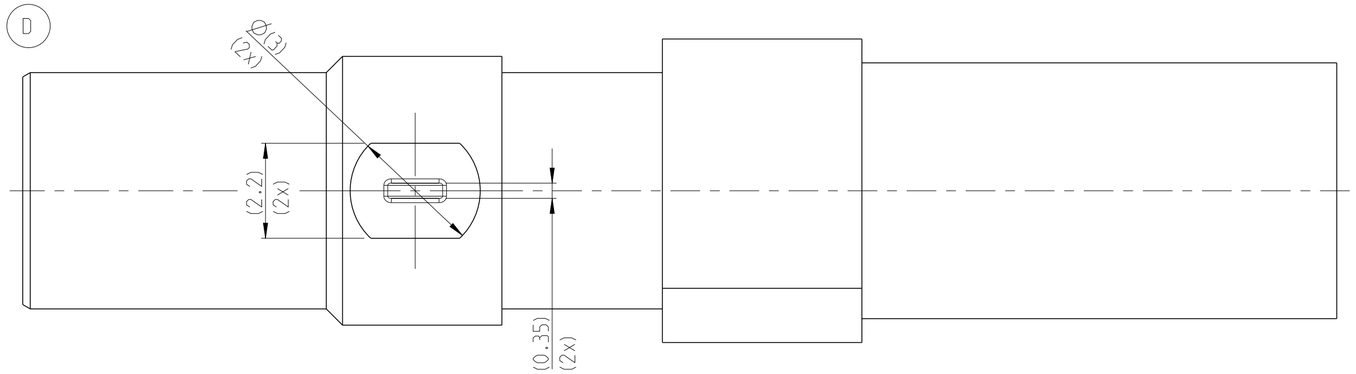

NOTES
Bemerkungen

1. CONCACT AREA
Kontaktbereich

2. PLATING: NICKEL 3µm MIN. ON TOP OF COPPER 0.5µm MIN. OVER ALL
Beschichtung: Nickel min. 3µm ueber Kupfer min. 0.5µm, ganzflaechich

3. PACKAGING: 500 PARTS PER PLASTIC BAG IN CARDBOARD
Verpackung: 500 Teile in PE-Beutel in Karton

D 4. TE-TRADEMARK
TE-Warenzeichen

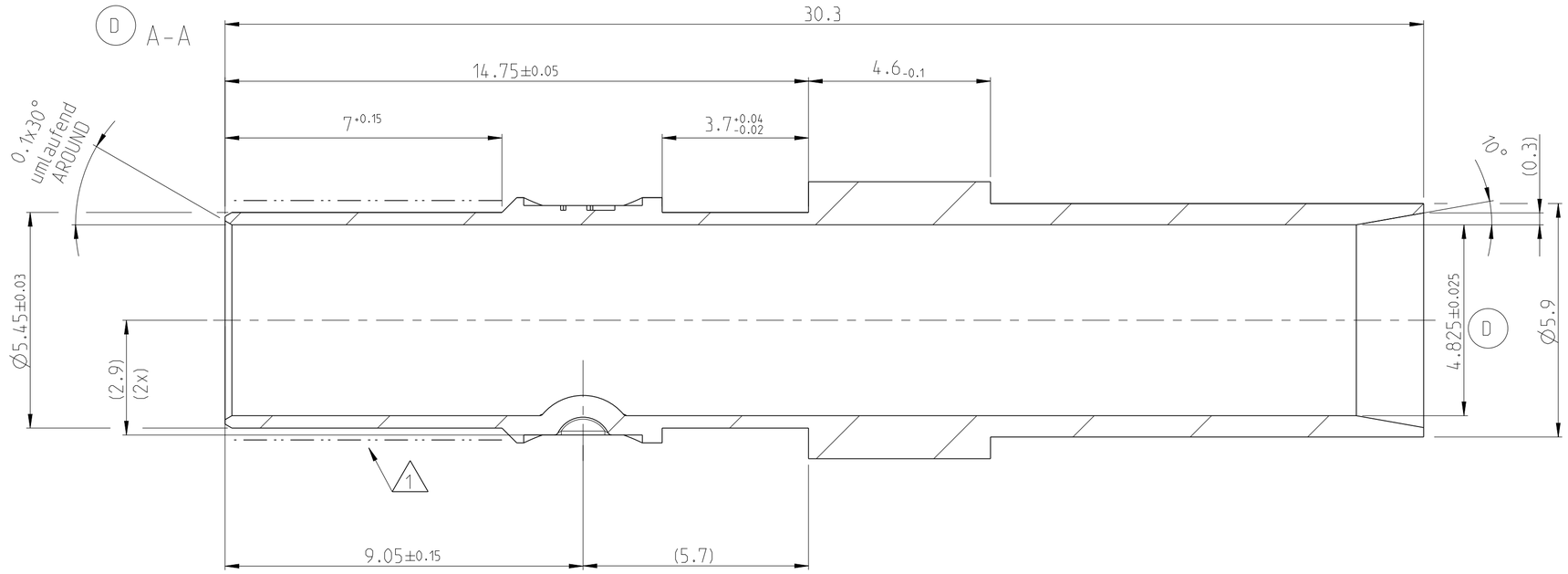

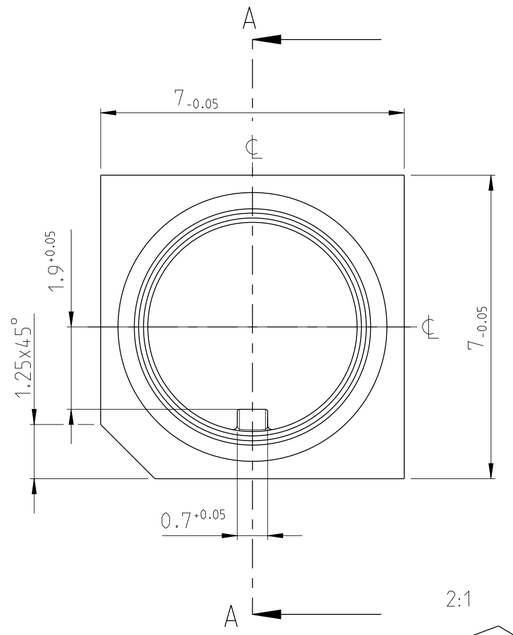

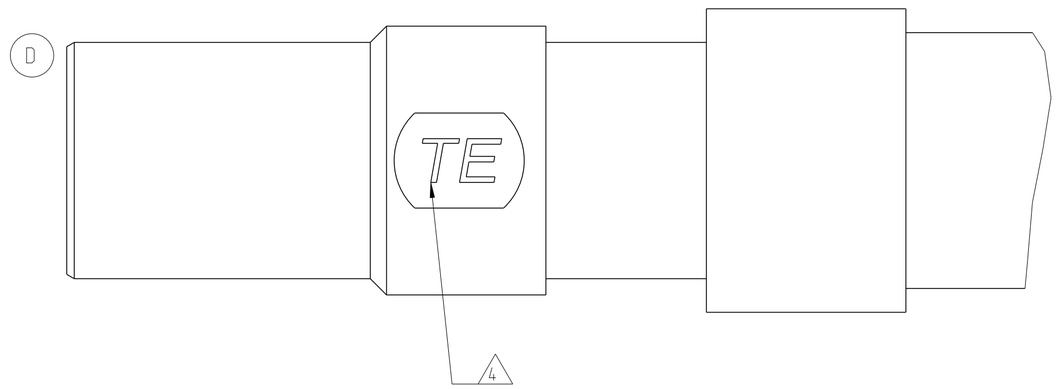

1823895
SUITABLE MATING PART Passender Gegenstecker

TE ORDER NO	REV	PCS	MATERIAL	SURFACE COLOR	DESCRIPTION	ITEM NO
1823902-1	D	1	CuZn39Pb3	–	HSD, SHIELD, FEMALE HSG.	1

THIS DRAWING IS A CONTROLLED DOCUMENT.

DIMENSIONS: mm

TOLERANCES UNLESS OTHERWISE SPECIFIED:
0 PLC ±0.1
1 PLC ±0.1
2 PLC ±0.1
3 PLC ±-
4 PLC ±-
ANGLES ±1°

MATERIAL: COPPER ALLOY
FINISH: SEE NOTES

DWN L. Nguyen 27AUG2012
CHK O. Fuck 27AUG2012
APVD U. Gassauer 28AUG2012
PRODUCT SPEC –
APPLICATION SPEC –
WEIGHT –

TE Connectivity

NAME
HSD, SHIELD, MALE HOUSING
HSD Schirmkontakt, Stiftgehaeuse
–

SIZE	CAGE CODE	DRAWING NO	RESTRICTED TO
A2	00779	C-1823902	–

CUSTOMER DRAWING | SCALE 10:1 | SHEET 1 OF 1 | REV D