THIS DRAWING IS UNPUBLISHED. RELEASED FOR PUBLICATION 2012
© COPYRIGHT 2012 TE Connectivity ALL RIGHTS RESERVED.

REVISIONS					
P	LTR	DESCRIPTION	DATE	DWN	APVD
	D1	E-13-018024	07NOV2013	LN	OF
	D2	E-13-018187	19NOV2013	LN	UG
	D3	SEE PCN: E-15-014632	25JAN2016	FF	UG
	D4	UPDATED RETAINER DESIGN	27MAY2022	KMD	JP

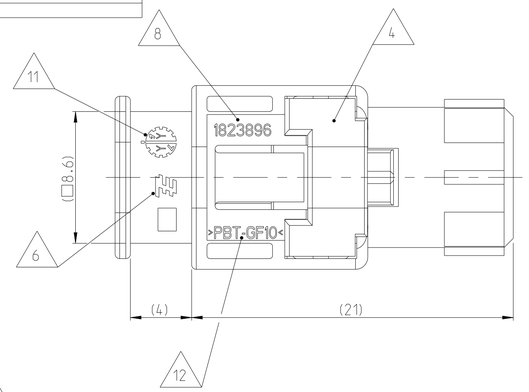

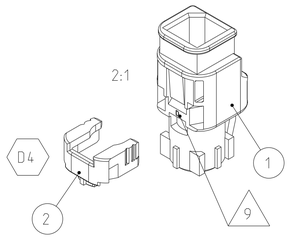

SECTION B-B

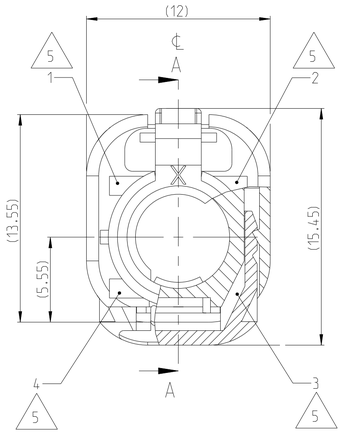

SECTION A-A

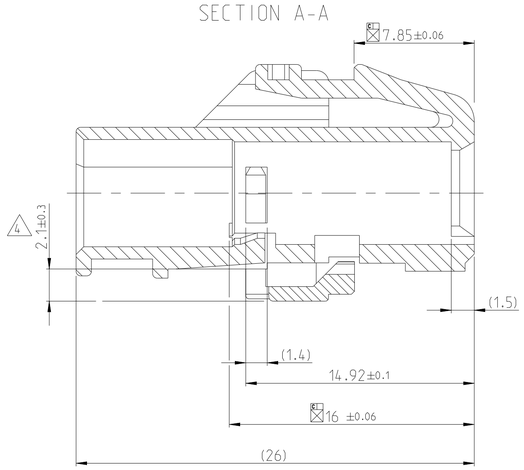

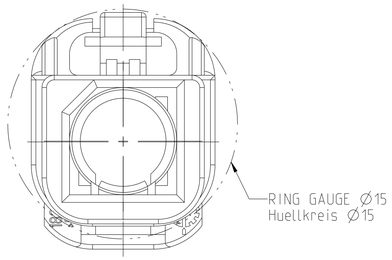

CODINGS
Scale 2:1

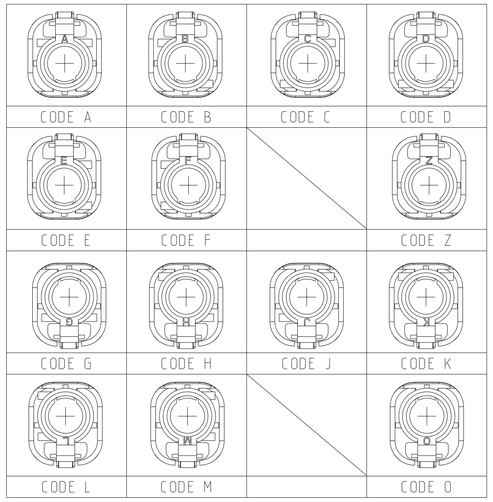

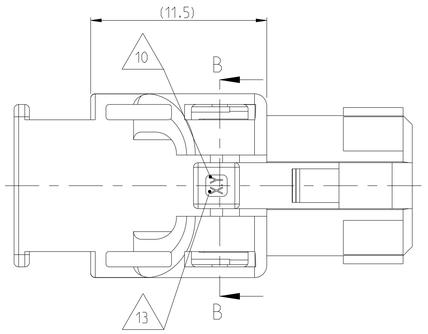

NOTES
Bemerkungen

1 PACKAGING: LOOSE PIECE IN PAPER BOX PN 973057-2
Verpackung als Schuettgut

2 DETAILS OF DESIGN ARE LEFT TO TE CONNECTIVITY
Einzelheiten der Ausfuehrung bleiben TE Connectivity ueberlassen

3 ALL DIMENSIONS IN BRACKETS () ONLY FOR INFORMATION
Alle Masse in () nur zur Information

4 CONDITION AS SUPPLIED: RETAINER IN PRE LOCKED POSITION
(CANNOT BE ENSURED IN CASE OF LOOSE PIECE PACKAGING)
Lieferzustand: Verriegelung in Vorraststellung
(es kann nicht bei Einzelteilverpackung gesichert)

5 ALL CODINGS RIBS SHOWN
Alle Kodierrippen dargestellt

6 TE CONNECTIVITY LOGO
TE Connectivity Logo

7 ORDER-NUMBER
Bestell-Nummer

8 PART NUMBER SINGLE PART
Teilenummer Einzelteil

9 REVISION-NUMBER SINGLE PART
Werkzeugaenderungsindex Einzelteil

10 CAVITY NUMBER SINGLE PART
Kammernummerierung Einzelteil

11 PRODUCTION-DATE
Produktions-Datum

12 MATERIAL MARKING
Werkstoffkennzeichnung

13 TOOL CAVITY MARKING SINGLE PART
Werkzeugnestmarkierung

14 SUITABLE CONTACTS: 2236772-X, 2294038-X
Passende Kontakte: 2236772-X, 2294038-X

15 SUITABLE MATING PARTS:
-IN-LINE-CONNECTOR: X-1823905-X WITH CONTACT 2236773-X;
-PCB-HEADERS: X-1823071-X;X-1823271-X;X-2286546-X;X-2286547-X;X-2288754-X;X-2286797-X;
-PARTS ACC. TO TE INTERFACE 114-18950
Passende Gegenstecker:
-In-Line-Connector: X-1823905-X WITH CONTACT 2236773-X;
-PCB-Headers: X-1823071-X;X-1823271-X;X-2286546-X;X-2286547-X;X-2288754-X;X-2286797-X;
-Teile nach TE Schnitstelle 114-18950

16 IN CASE RETAINER IS UNINTENTIONALLY SET IN END POSITION
BEFORE LOADING HSD CAVITY WITH CONTACT, RETAINER CAN
BE RESET TO PRE LOCK POSITION WITH EXTRACTION TOOL
PN 4-1579028-4 ACCORDING APPLICATION SPEC 114-94058.
Falls der Retainer in Endraststellung ist, bevor der Kontakt montiert wurde,
kann er mit dem Ausdrueckwerkzeug PN 4-1579028-4, nach Anwendungs-
spezifikation 114-94058 wieder in Vorraststellung gebracht werden.

CUSTOMER NEUTRAL VERSION

TE ASSY-PN 7	REV.	COD.	DESCRIPTION	MATERIAL	COLOUR	SILMILAR RAL	POS.
3-1823898-9	D	O	RETAINER	PBT-GF10	violet	4006	2
			HOUSING	PBT-GF10	light green	6027	1
3-1823898-6	D	M	RETAINER	PBT-GF10	violet	4006	2
			HOUSING	PBT-GF10	orange	2003	1
3-1823898-5	D	L	RETAINER	PBT-GF10	violet	4006	2
			HOUSING	PBT-GF10	yellow green	6018	1
3-1823898-4	D	K	RETAINER	PBT-GF10	violet	4006	2
			HOUSING	PBT-GF10	curry	1027	1
3-1823898-3	D	J	RETAINER	PBT-GF10	violet	4006	2
			HOUSING	PBT-GF10	beige	1001	1
3-1823898-2	D	H	RETAINER	PBT-GF10	violet	4006	2
			HOUSING	PBT-GF10	violet	4003	1
3-1823898-1	D	G	RETAINER	PBT-GF10	violet	4006	2
			HOUSING	PBT-GF10	grey	7031	1
2-1823898-9	D	Z	RETAINER	PBT-GF10	violet	4006	2
			HOUSING	PBT-GF10	water-blue	5021	1
2-1823898-6	D	F	RETAINER	PBT-GF10	violet	4006	2
			HOUSING	PBT-GF10	brown	8011	1
2-1823898-5	D	E	RETAINER	PBT-GF10	violet	4006	2
			HOUSING	PBT-GF10	green	6002	1
2-1823898-4	D	D	RETAINER	PBT-GF10	violet	4006	2
			HOUSING	PBT-GF10	bordeaux	4004	1
2-1823898-3	D	C	RETAINER	PBT-GF10	violet	4006	2
			HOUSING	PBT-GF10	blue	5005	1
2-1823898-2	D	B	RETAINER	PBT-GF10	violet	4006	2
			HOUSING	PBT-GF10	white	9001	1
2-1823898-1	D	A	RETAINER	PBT-GF10	violet	4006	2
			HOUSING	PBT-GF10	black	9005	1

PRODUCT CHARACTERISTICS ACC. QMP EMEA_12
BESONDERE MERKMALE NACH QMP EMEA_12

THIS DRAWING IS A CONTROLLED DOCUMENT.
DIMENSIONING AND TOLERANCING PER GPS (ISO STANDARDS).

DIMENSIONS: mm

TOLERANCES UNLESS OTHERWISE SPECIFIED:
0 PLC ±0.3
1 PLC ±0.3
2 PLC ±0.3
3 PLC ±-
4 PLC ±-
ANGLES ±2°

MATERIAL: see table
FINISH: -

DWN L. Nguyen 27AUG2012
CHK O.Fuck 28AUG2012
APVD U. Gassauer 20NOV2013
PRODUCT SPEC 108-94334
APPLICATION SPEC 114-94058
WEIGHT -

TE Connectivity

NAME 4POS, HSD, REC. HOUSING, ASSY
4pol, HSD, Buchsengehaeuse, Assy
-

SIZE A1 | CAGE CODE 00779 | DRAWING NO C-1823898 | RESTRICTED TO -

CUSTOMER DRAWING | SCALE 5:1 | SHEET 1 OF 1 | REV D4

4805 (3/13)