© 2006 TE Connectivity. All Rights Reserved.

REVISIONS					
P	LTR	DESCRIPTION	DATE	DWN	APVD
	C1	REVISED PER ECN-21-123302	25OCT2021	RZ	WK

NOTES

1. SINGLE PACK IN ACCORDANCE WITH AMP SPEC 107-3275
2. 100 TRAY PACK IN ACCORDANCE WITH AMP SPEC 107-3275
3. Ni PLATING
4. TIN PLATING
5. FOR TECHNICAL DATA REFER TO YOUR LOCAL TE CONNECTIVITY SALES OFFICE
6. ALL DIMENSIONS ARE NOMINAL FOR REFERENCE ONLY UNLESS OTHERWISE STATED

	DIMENSIONS							
	DIE SET	E	D	C	B	A	CABLE GROUPS	PART NO.
	9-1478243-0	8.30	9.30	8.30	7.00	5.70	CT125	5-1814826-7
OBSOLETE	~~9-1478243-0~~	~~8.30~~	~~9.30~~	~~8.30~~	~~7.00~~	~~5.70~~	~~CT125~~	~~5-1814826-6~~
	9-1478242-0	6.50	7.50	6.70	5.60	4.60	CT100	5-1814826-5
	9-1478242-0	6.50	7.50	6.70	5.60	4.60	CT100	5-1814826-4
OBSOLETE	~~9-1478243-0~~	~~8.60~~	~~9.60~~	~~8.70~~	~~6.80~~	~~4.85~~	~~RG6/U~~	~~5-1814826-3~~
	9-1478243-0	8.60	9.60	8.70	6.80	4.85	RG6/U	5-1814826-2
OBSOLETE	~~9-1478242-0~~	~~6.50~~	~~7.50~~	~~6.80~~	~~4.90~~	~~3.90~~	~~RG59B/U, 62A/U, 140/U, 210/U, URM90, Belden 9291, 9291, KX6A, KX25, KX52, KX53~~	~~5-1814826-1~~
	9-1478242-0	6.50	7.50	6.60	4.90	3.90	RG59B/U, 62A/U, 140/U, 210/U, URM90, Belden 9291, 9291, KX6A, KX25, KX52, KX53	5-1814826-0

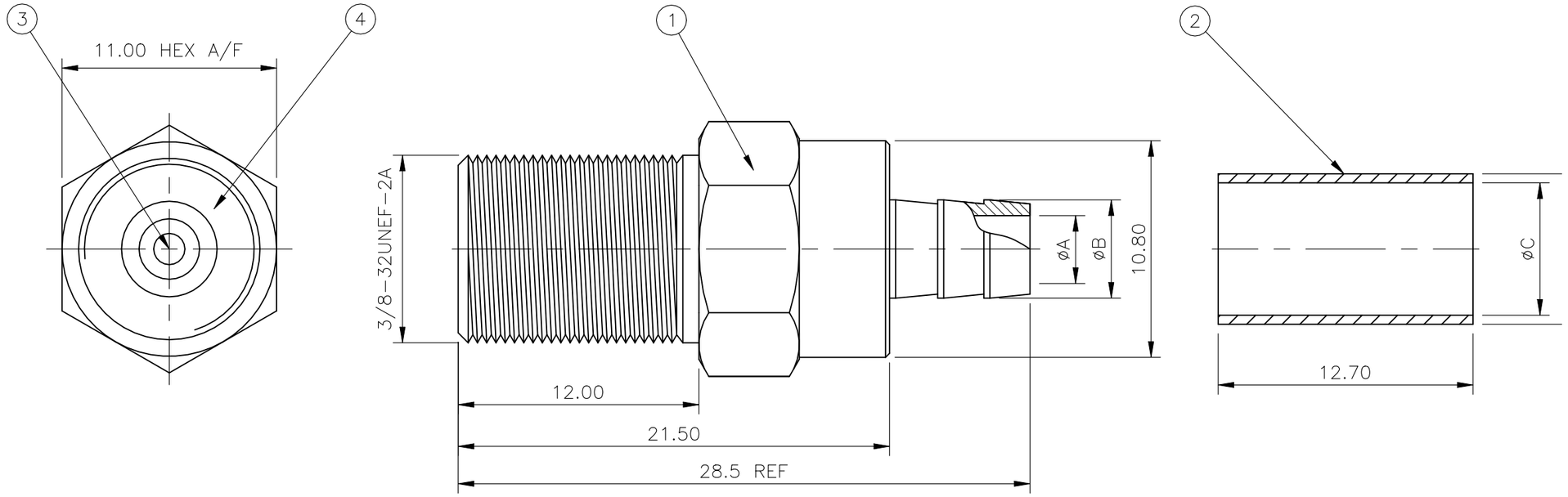

	OBSOLETE			OBSOLETE		OBSOLETE					
1	~~1~~	1	1	~~1~~	1	~~1~~	1	POLYPROPYLENE		INSULATOR	4
1	~~1~~	1	1	~~1~~	1	~~1~~	1	BRASS	4	CONTACT	3
1	~~1~~	1	1	~~1~~	1	~~1~~	1	ZINC ALLOY	3	FERRULE	2
1	~~1~~	1	1	~~1~~	1	~~1~~	1	BRASS	3	BODY	1
5--7	5--6	5--5	5--4	5--3	5--2	5--1	5--0	MATERIAL		DESCRIPTION	ITEM
2	1	1	2	2	1	1	2				
QUANTITY PER ASSY								PARTS LIST			

RECOMMENDED CABLE STRIPPING DIM'S

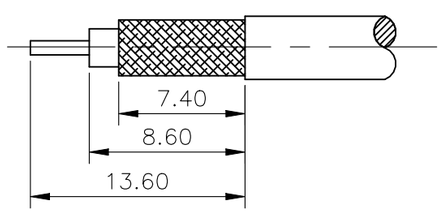

RECOMMENDED CRIMP OUTER FERRULE A/F HEX

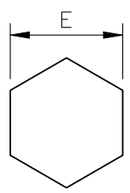

THIS DRAWING IS A CONTROLLED DOCUMENT.

DIMENSIONS: mm

TOLERANCES UNLESS OTHERWISE SPECIFIED:

0 PLC	± –
1 PLC	± –
2 PLC	± 0.3
3 PLC	± –
4 PLC	± –
ANGLES	± –

MATERIAL: SEE TABLE

FINISH: –

DWN	ANSON MA	14FEB09
CHK	RITA ZUO	14FEB09
APVD	BOB ZHAO	14FEB09
PRODUCT SPEC	108-112000	
APPLICATION SPEC	—	
WEIGHT	0.000000	

TE Connectivity

NAME: F TYPE BLK JK R/M – –

SIZE	CAGE CODE	DRAWING NO	RESTRICTED TO
A3	00779	C-1814826	—

CUSTOMER DRAWING | SCALE NTS | SHEET 1 OF 1 | REV C1