1 OBSOLETE PARTS: OBSOLETE CIS STREAMLINING PER D.RENAUD/D.SINISI

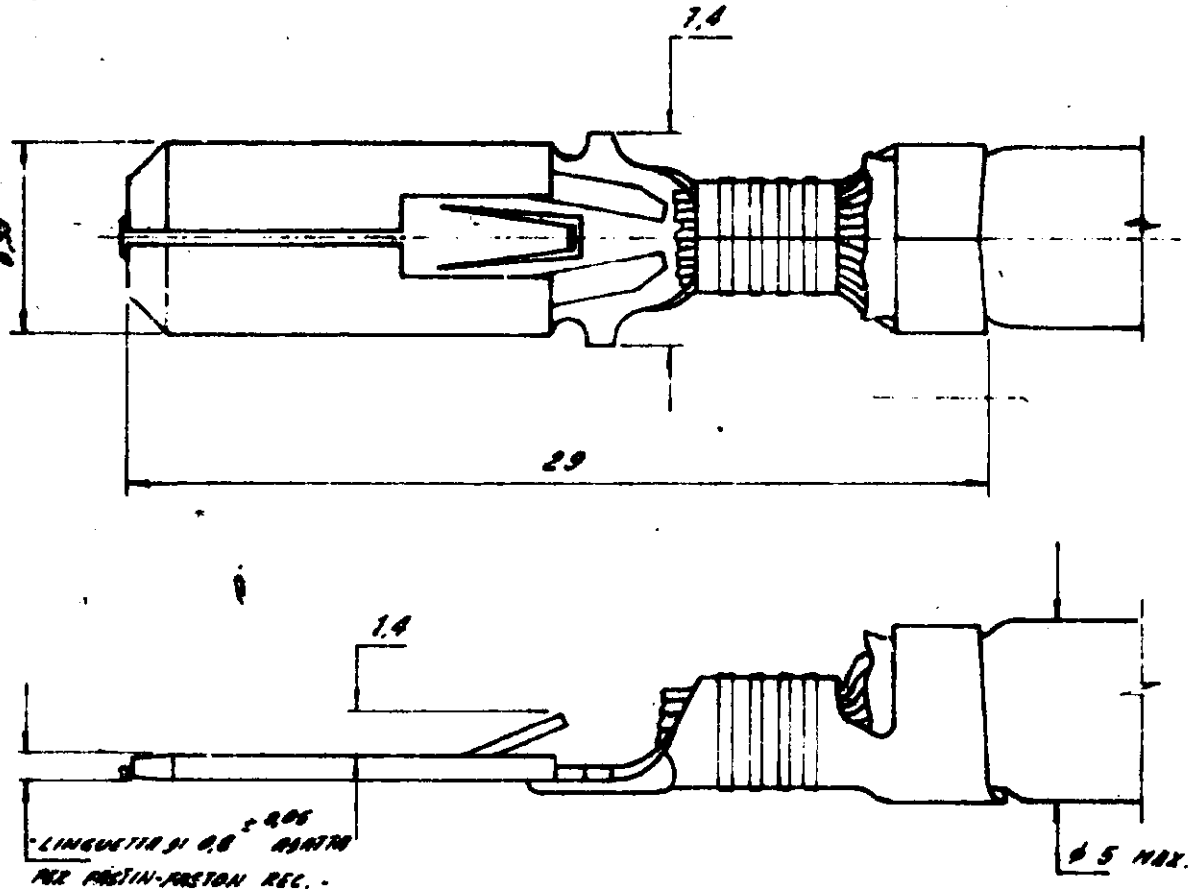

MATERIALE E FINITURA	NUMERO LOOSE PIECE	
[illegible]	180409-1	
[illegible] STAGNATO	180409-2	
~~[illegible] FOSFOROSO~~	~~180409-3~~	OBSOLETE 1
~~[illegible] FOSFOROSO ARGENTATO~~	~~180409-4~~	OBSOLETE
~~[illegible] FOSFOROSO STAGNATO~~	~~180409-5~~	OBSOLETE 1
[illegible] ARGENTATO	180409-6	

O1	REVISED PER ECO-09-026346	KK	AEG	26NOV 09

© 2021 AMP INCORPORATED ALL RIGHTS RESERVED. AMP IS COPYRIGHT PATENTS AND/OR PATENTS PENDING

CUSTOMER COPY
REFERENCE ONLY

MATERIAL AND FINISH: SEE TABLE

WIRE RANGE INSULATION: 4-6 AWG

TOLERANCE EXCEPT AS NOTED: ±0.4 ±0.0

SCALE: 4:1

CLASS: WIRE TAB REC

TYPE: AUTO MACH

NO: C-180403

REV: O1

NAME: .250 SERIES FASTIN TAB