THIS DRAWING IS UNPUBLISHED. RELEASED FOR PUBLICATION 2011
© COPYRIGHT 2011 - ALL RIGHTS RESERVED.

REVISIONS

| P | LTR | DESCRIPTION | DATE | DWN | APVD |
|---|---|---|---|---|---|
| | A | NEW DRAWING | 16FEB2018 | SG | JL |
| | B | ADD NEW P/N 1-1801696-3 | 01FEB2019 | SG | JL |
| | C | P/N 1-1801696-3 OBSOLETED | 25FEB2022 | NT.N | J.L |
| | | | | | |

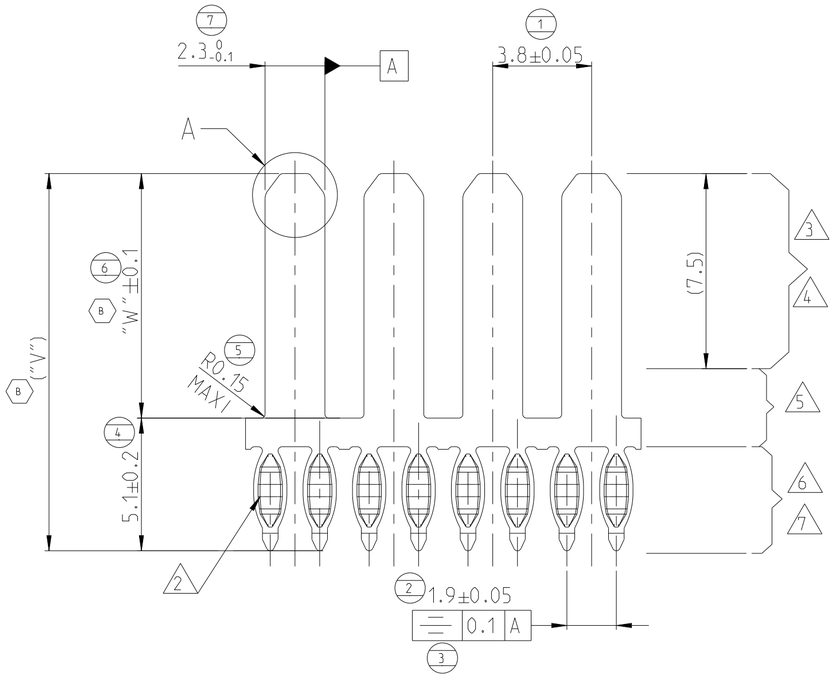


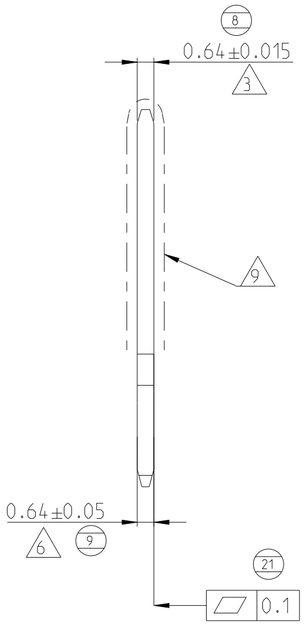


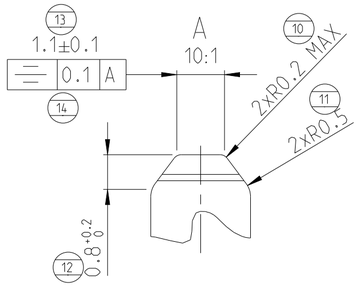


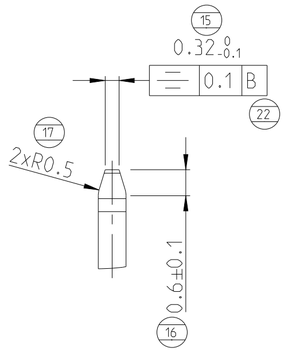


1 MATERIAL: CuNiSi

2 PRESS-FIT MULTISPRING ACC TE SPEC 108-90800 REV-D

3 CONTACT AREA

4 TIN PLATING - LEAD FREE
THICKNESS 0.8 TO 4 µm

5 TRANSITION AREA Sn ALLOWED

6 PRESS-FIT AREA

7 PLATING - LEAD FREE
THICKNESS ACC TE SPEC 108-90800 REV-D

8 PCB HOLE DEFINITION: SEE TE SPEC 108-90800 REV-D

9 NO BURR, NO SHARP EDGE

10 DIM CONTROLLED BY INSERTION MACHINE

11 ACCORDING TO PACKAGING SPECIFICATION TE CONNECTIVITY : 107-15674

12 PART NUMBER OBSOLETED

INSERTED VERSION

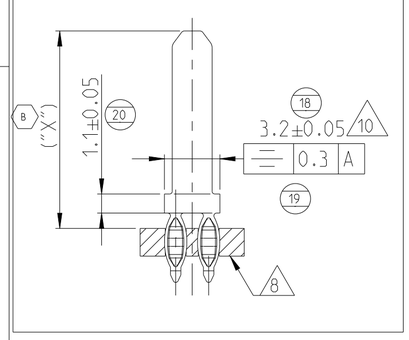


| FINISH | MATERIAL | DIM. "V" | DIM. "W" | DIM. "X" | TE PART NUMBER | PRC |
|---|---|---|---|---|---|---|
| 3 4 5 6 7 | 1 | 14.5 | 9.4 | 11.4 | 2-1801696-1 | A |
| | | 16.5 | 11.4 | 13.4 | B 1-1801696-3 12 C | A |

DEREELING DIRECTION

11

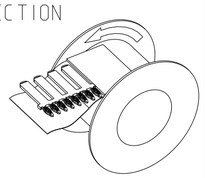

THIS DRAWING IS A CONTROLLED DOCUMENT.

DIMENSIONS: mm

TOLERANCES UNLESS OTHERWISE SPECIFIED:
0 PLC ±
1 PLC ±0.1
2 PLC ±
3 PLC ±
4 PLC ±
ANGLES ±1°

MATERIAL - -

FINISH - -

DWN S. GALLERAND 16FEB2018
CHK J. LALANGE 16FEB2018
APVD J. LALANGE 16FEB2018
PRODUCT SPEC -
APPLICATION SPEC -
WEIGHT -

TE Connectivity

NAME TAB 2.3 x 0.64 NS WITH MULTISPRING
- -

SIZE A2 | CAGE CODE 00779 | DRAWING NO C-1801696 | RESTRICTED TO

CUSTOMER DRAWING | SCALE 6:1 | SHEET 1 OF 1 | REV C

1471-9 (3/13)