THIS DRAWING IS UNPUBLISHED. COPYRIGHT PROTECTED BY DMC
© COPYRIGHT20 - RELEASED FOR PUBLICATION 20 TYCO ELECTRONICS. ALL RIGHTS RESERVED. ALL RIGHTS RESERVED.

LOC	DIST
F	00

REVISIONS

F	LTR REV	DESCRIPTION MODIFICATIONS	DATE	DWN DESS	APVD APP
	B	UPDATE TOLERANCE OF KEYING	26JUL2011	DB	XR
	C	ADD NUMBER OF PACKAGING SPECIFICATION	06APR2012	DB	XR
	D	SWS 963142-1 SUPERSEDED BY 963142-3	14NOV2012	DB	XR
	E	REMOVED WIRE 1.5MM2 FOR GOLD PLATED TAB	03JUL2013	DB	XR

REF TE / TE P/N	REVISION PRODUIT / PRC	CODAGE / CODING	COULEUR / COLOR	CODAGE: / KEYING
1801606-1	A	A	NOIR / BLACK	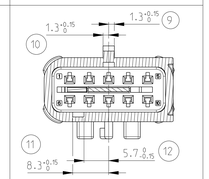
1801606-2	A	B	GRIS / GREY	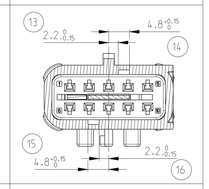
1801606-3	A	C	BLEU / BLUE	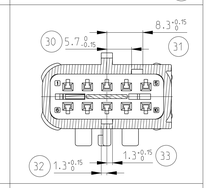
1801606-4	A	D	VERT / GREEN	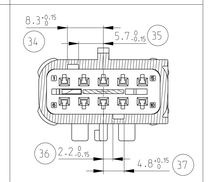
1801606-5	A	E	ROUGE / RED	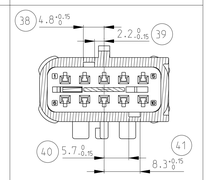
1801606-6	A	PAS DE CODAGE / NO KEYING	VIOLET / VIOLET	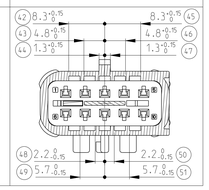

VERROU SECONDAIRE / SECONDARY LOCK

PRE-VERROUILLE (POSITION DE LIVRAISON)	PRE-LOCKED (DELIVERY POSITION)	VERROUILLE (POSITION DE MONTAGE)	LOCKED (ASSEMBLED POSITION)
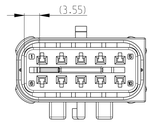		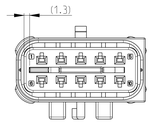	

COMPOSANTS ASSOCIES *(APPLIED COMPONENTS)*

REFERENCE TE / *TE PART NUMBER*	DESIGNATION / *DESCRIPTION*	FINITION / *FINISH*	REMARQUE / *NOTE*
1718758-1	CONTACT / *CONTACT*	ETAME / *TIN PLATED*	LANGUETTE MCON *(MCON CONTACT)* 0.25 A 0.35 MM² *(SQMM)*
1718758-2	CONTACT / *CONTACT*	DORE / *GOLD PLATED*	LANGUETTE MCON *(MCON CONTACT)* 0.25 A 0.35 MM² *(SQMM)*
1718758-3	CONTACT / *CONTACT*	ARGENTE / *SILVER PLATED*	LANGUETTE MCON *(MCON CONTACT)* 0.25 A 0.35 MM² *(SQMM)*
1718760-1	CONTACT / *CONTACT*	ETAME / *TIN PLATED*	LANGUETTE MCON *(MCON CONTACT)* 0.5 A 0.75 MM² *(SQMM)*
1718760-2	CONTACT / *CONTACT*	DORE / *GOLD PLATED*	LANGUETTE MCON *(MCON CONTACT)* 0.5 A 0.75 MM² *(SQMM)*
1718760-3	CONTACT / *CONTACT*	ARGENTE / *SILVER PLATED*	LANGUETTE MCON *(MCON CONTACT)* 0.5 A 0.75 MM² *(SQMM)*
1718762-1	CONTACT / *CONTACT*	ETAME / *TIN PLATED*	LANGUETTE MCON *(MCON CONTACT)* 1 A 1.5 MM² *(SQMM)*
1718762-2	CONTACT / *CONTACT*	DORE / *GOLD PLATED*	LANGUETTE MCON *(MCON CONTACT)* 1 MM² *(SQMM)*
1718762-3	CONTACT / *CONTACT*	ARGENTE / *SILVER PLATED*	LANGUETTE MCON *(MCON CONTACT)* 1 A 1.5 MM² *(SQMM)*
963142-3	Joint Uni-Filaire / *Single Wire Seal*		FIL *(WIRE)* Ø1.75 à 2.4 DE SECTION 1 - 1.5 MM² ET ALVEOLE MCON *(MCON CAVITY)* Ø3.95
963142-2	Joint Uni-Filaire / *Single Wire Seal*		FIL *(WIRE)* Ø1.25 à 1.9 DE SECTION 0.35 - 0.75 MM² ET ALVEOLE MCON *(MCON CAVITY)* Ø3.95
963143-1	BOUCHON / *CAP*		OBTURATEUR POUR ALVEOLES MCON Ø3.95 *(PLUG FOR Ø3.95 MCON CAVITY)*

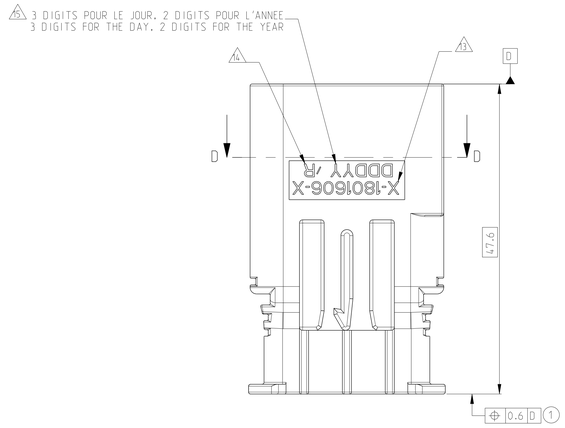

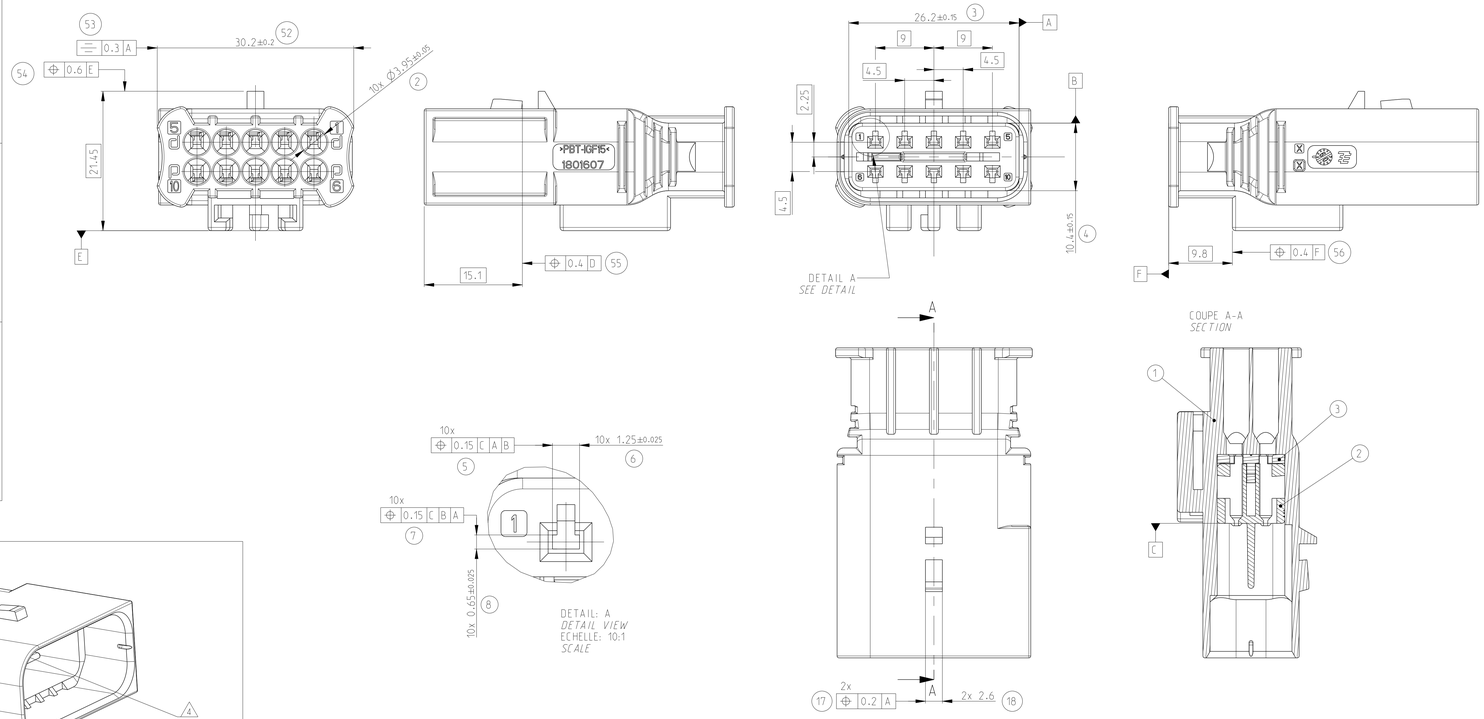

NOTE:

1	1801606-1 : REPRESENTE	*1801606-1 : AS SHOWN*
2	COMPATIBLE AVEC ALVEOLES STD. LANGUETTES MCON 1.2	*COMPATIBLE WITH CAVITY STANDARD TAB MCON 1.2*
4	REPERE ALVEOLES	*CAVITY NUMBER*
5	LOGO TE	*TE STAMP*
6	IDENTIFICATION MATIERE	*MATERIAL IDENTIFICATION*
7	DATE DE MOULAGE	*MOLDING DATE CODE*
8	N° EMPREINTE DU MOULE	*MOLD CAVITY IDENTIFICATION*
9	REFERENCE COMPOSANTS	*COMPONENTS PART NUMBER*
10	CAHIER DE PRECONISATION : 411-15748	*INSTRUCTION SHEET : (SEE BEFORE)*
12	INDICE DE REVISION COMPOSANTS	*PART REVISION CODE*
13	REFERENCE DU PRODUIT ASSEMBLE	*ASSEMBLY PART NUMBER*
14	INDICE DE REVISION DU PRODUIT ASSEMBLE	*ASSEMBLY PART REVISION CODE*
15	DATE D'ASSEMBLAGE	*ASSEMBLY DATE CODE*
16	LOGO POUR ORIENTATION DU CONTACT	*LOGO FOR CONTACT ORIENTATION*
17	SPECIFICATION DE CONDITIONNEMENT : 107-15635	*PACKAGING SPECIFICATION : (SEE BEFORE)*

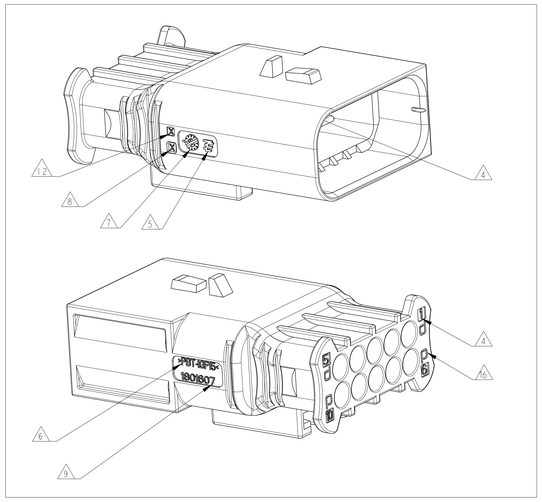

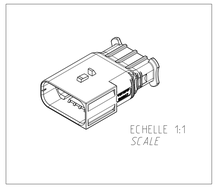

ECHELLE 1:1
SCALE

JAUNE / *YELLOW*	PBT-IGF30	DOUBLE VERROUILLAGE / *SECONDARY LOCKING*	3
NOIR / *BLACK*	PBT-IGF15	BOITIER CAVITE / *CAVITY HOLDER*	2
VOIR TABLEAU DES REF. / *SEE TABLE OF PART NUMBER*	PBT-IGF15	BOITIER PORTE-LANGUETTES (CODAGE (VOIR TABLEAU DES REFS) / *TAB HOUSING CODING (SEE TABLE OF PART NO)*	1
COULEUR / *COLOR*	**MATIERE / *MATERIAL***	**DESCRIPTION / *TITLE***	**REP. / *ITEM***

THIS DRAWING IS A CONTROLLED DOCUMENT.
TO PLAN EST UN DOCUMENT CONTROLE POUR ANC INCORPORATED
A CUE SUBSIDIARY ETERNA SPECIAL CONDUCTOR S.ARRAYS
TOLERANCE A MM EN FRANCE MAIN DEPARTS IN INCHES TOLERANCES

DIMENSIONS: mm

DIMENSIONS ENTRE LIMITES	TOLERANCES UNLESS OTHERWISE SPECIFIED
0 A 6	±0.2
6 A 30	±0.3
30 A 120	±0.4
120 A 400	±0.5
400 A 1000	±0.8
1000 A 2000	±1.2
2000 A 4000	±2

MATERIAL / MATIERE: SEE TABLE
FINISH / FINITION: -

DWN/DESSINE: D. BANCE 05MAY2011
CHK/VERIFIE: X. BOUILLAGO 05MAY2011
APVD/APPROUVE: L. DAHER 05MAY2011
PRODUCT SPEC / SPEC. PRODUIT: 108-15398
APPLICATION SPEC / SPEC. APPLICATION: 411-15748
WEIGHT / MASSE APPROX 14g

TE Connectivity

NAME / TITRE: PORTE-LANGUETTES 10 VOIES MCON
10 WAYS MCON TAB HOUSING
-

SIZE / FORMAT: A0 | CAGE CODE: 00779 | DRAWING NO / No. PLAN: C-1801606 | RESTRICTED TO / MODIFIER A: -

Customer Drawing | PLAN CLIENT | UNDIMENSIONNEL POUR REFERENCE | SCALE / ECHELLE 4:1 | SHEET / FEUILLE 1 DE 1 | REV E

4806 (3/11)