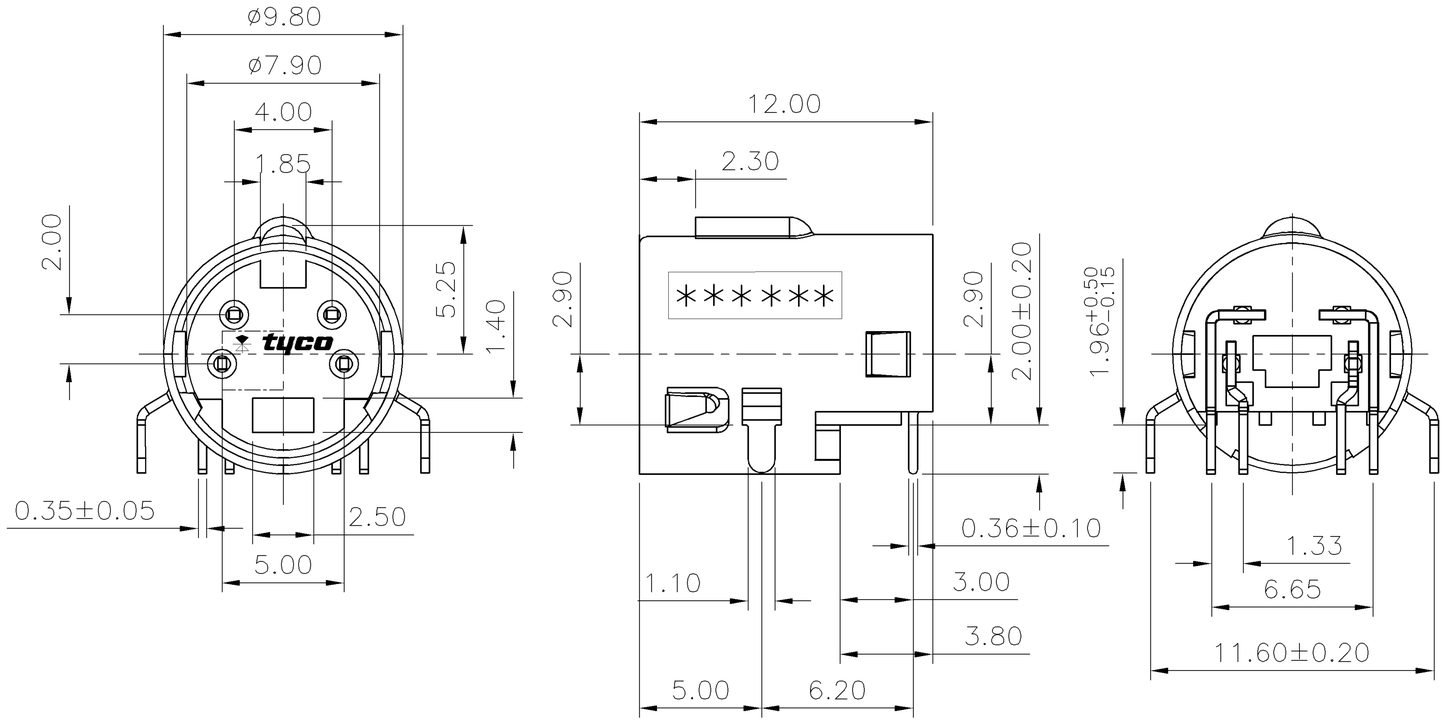


NOTES:
1.MATERIAL:
HOUSING: THERMOPLASTIC, HIGH TEMP. COLOR :BLACK
CONTACT: PHOSPHOR BRONZE.
SHELL: BRASS
2.FINISH:
CONTACT:12μ" MIN. GOLD PLATING ON CONTACT AREA,
GOLD FLASH PLATING ON SOLDER TAILS.
50μ" MIN NICKEL UNDER PLATING.
SHELL:80~200μ" MATTE TIN PLATING ALL OVER,
50μ" MIN NICKEL UNDERPLATING.
3. RECOMMENDED PCB THICKNESS : 1.2mm
4. REFLOW SOLDER CAPABLE TO 260° MAX
PER TYCO SPEC.109-201.CONDITION B

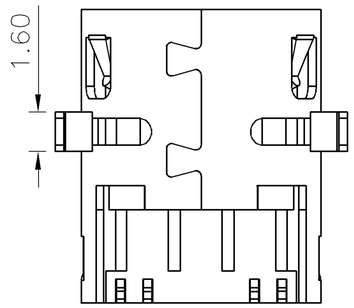


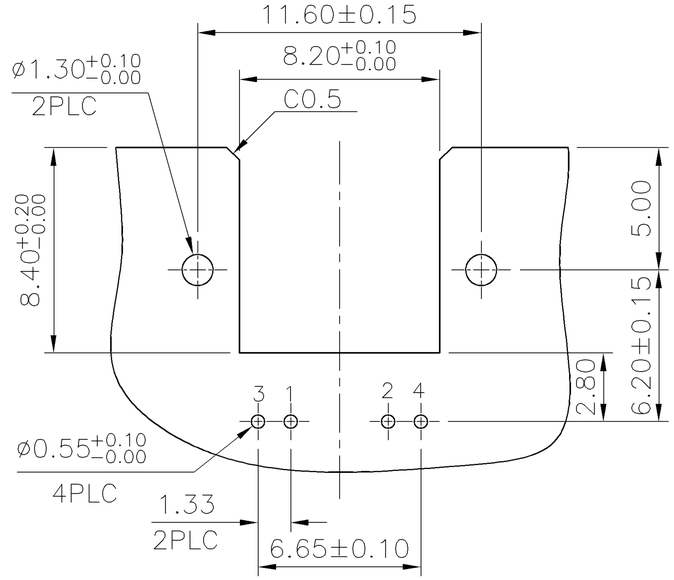


RECOMMENDED PCB LAYOUT
TOLERANCE:±0.05

| | | | | |
|---|---|---|---|---|
| A | FIRST RELEASED | ECR-05-016084 | SH / WK | 23NOV 2005 |
| 0 | FIRST RELEASED | -- | SH / WK | 10AUG 2005 |
| LTR | REVISION RECORD | ECN | DWN / CHK | DATE |

TOLERANCES UNLESS OTHERWISE SPECIFIED:
0 PLC ±
1 PLC ±0.38
2 PLC ±0.25
3 PLC ±
ANGLES ±3°

MATERIAL: SEE NOTE

FINISH: SEE NOTE

DWN: S. HOU 23-NOV-2005
CHK: W.J. KE 23-NOV-2005
APVD: W.J. KE 23-NOV-2005
PRODUCT SPEC: 108-57387
QUALIFICATION TEST REPOERT: 501-57803
WEIGHT: 1.4 GRAM

tyco Electronics
TYCO HOLDINGS (BERMUDA) VII LTD. TAIWAN BRANCH

NAME: MINI DIN 4P, OFFSET, DIP TYPE

1775849-1
PART NUMBER

| LOC | SIZE | DRAWING NO | REV |
|---|---|---|---|
| DW | A3 | C-1775849 | A |

SCALE: --
SHEET: 1 OF 2

CUSTOMER DRAWING

NUMBER C-1775849
3RD ANGLE PROJECTION
METRIC

THIS INFORMATION IS CONFIDENTIAL AND IS DISCLOSED TO YOU ON CONDITION THAT NO FURTHER DISCLOSURE IS MADE BY YOU TO OTHER THAN AMP PERSONNEL WITHOUT WRITTEN AUTHORIZATION FROM AMP (TAIWAN) LTD.
DIMENSIONS IN MILLIMETERS. DO NOT SCALE PRINT.

PRINT DIST
DW

NUMBER C-1775849

3RD ANGLE PROJECTION

METRIC

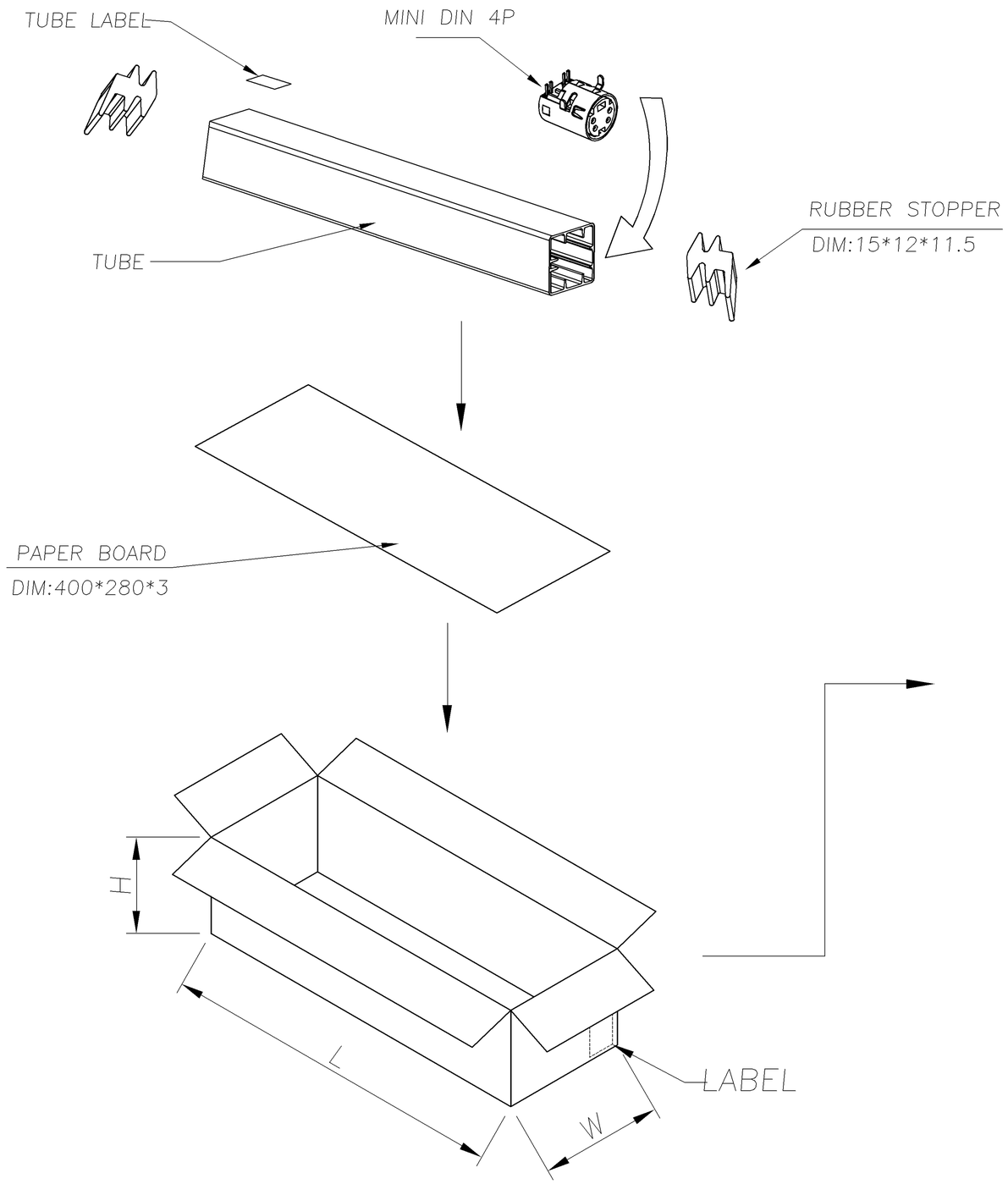


NOTE:
1. MATERIAL :
   1.1 TUBE : THERMOPLASTIC
   1.2 SHIPPING CARTON : CORRUGATED FIBER
2. DIMENSION:
   2.1 TUBE: L=394,W=14.2, H=12.3
   2.2 SHIPPING CARTON: L=405, W=290, H=148
3. QUANTITY:
   3.1 PRIMARY PACKING: 30 PCS/TUBE
   3.2 SECONDARY PACKING: 200 TUBES/CARTON(6,000PCS)
4. WEIGHT :
   4.1 NET WEIGHT : 8.4kg/CARTON
   4.2 GROSS WEIGHT : 60g/TUBE,12.0 kg/CARTON

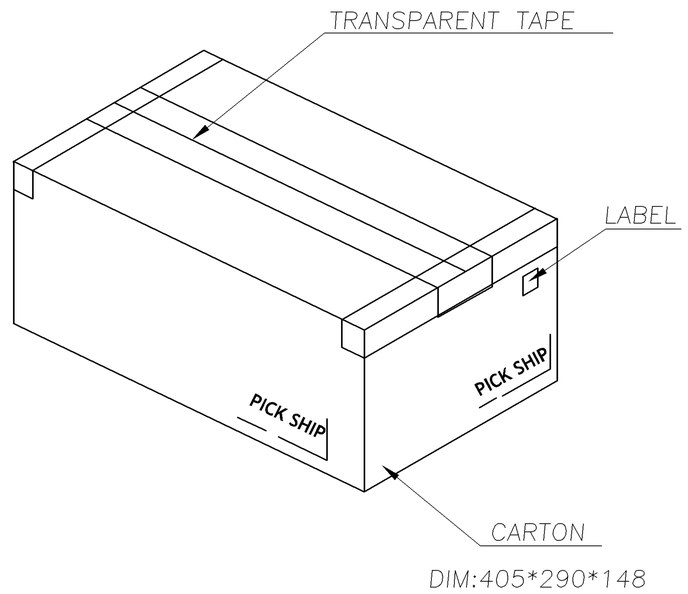


THIS INFORMATION IS CONFIDENTIAL AND IS DISCLOSED TO YOU ON CONDITION THAT NO FURTHER DISCLOSURE IS MADE BY YOU TO OTHER THAN AMP PERSONNEL WITHOUT WRITTEN AUTHORIZATION FROM AMP (TAIWAN) LTD. DO NOT SCALE PRINT. DIMENSIONS IN MILLIMETERS.

PRINT DIST DW

| | | | | |
|---|---|---|---|---|
| | SEE SHEET 1 | | | |
| LTR | REVISION RECORD | ECN | DWN / CHK | DATE |

TOLERANCES UNLESS OTHERWISE SPECIFIED:
0 PLC ±
1 PLC ±0.3
2 PLC ±0.2
3 PLC ±
ANGLES ±3°

MATERIAL: SEE NOTE

FINISH: SEE NOTE

| | |
|---|---|
| DWN | S. HOU 23-NOV-2005 |
| CHK | W.J. KE 23-NOV-2005 |
| APVD | W.J. KE 23-NOV-2005 |
| PRODUCT SPEC | |
| QUALIFICATION TEST REPOERT | |
| WEIGHT | |

tyco Electronics — TYCO HOLDINGS (BERMUDA) VII LTD. TAIWAN BRANCH

NAME: MINI DIN 4P, OFFSET, DIP TYPE

| LOC | SIZE | DRAWING NO | REV |
|---|---|---|---|
| DW | A3 | C-1775849 | A |

SCALE: -- SHEET: 2 OF 2

CUSTOMER DRAWING