THIS DRAWING IS UNPUBLISHED. RELEASED FOR PUBLICATION 20
© COPYRIGHT 20 BY - ALL RIGHTS RESERVED.

REVISIONS

P	LTR	DESCRIPTION	DATE	DWN	APVD
	A3	REVISED PER ECO-17-009774	06SEP2017	M.G.	M.G.

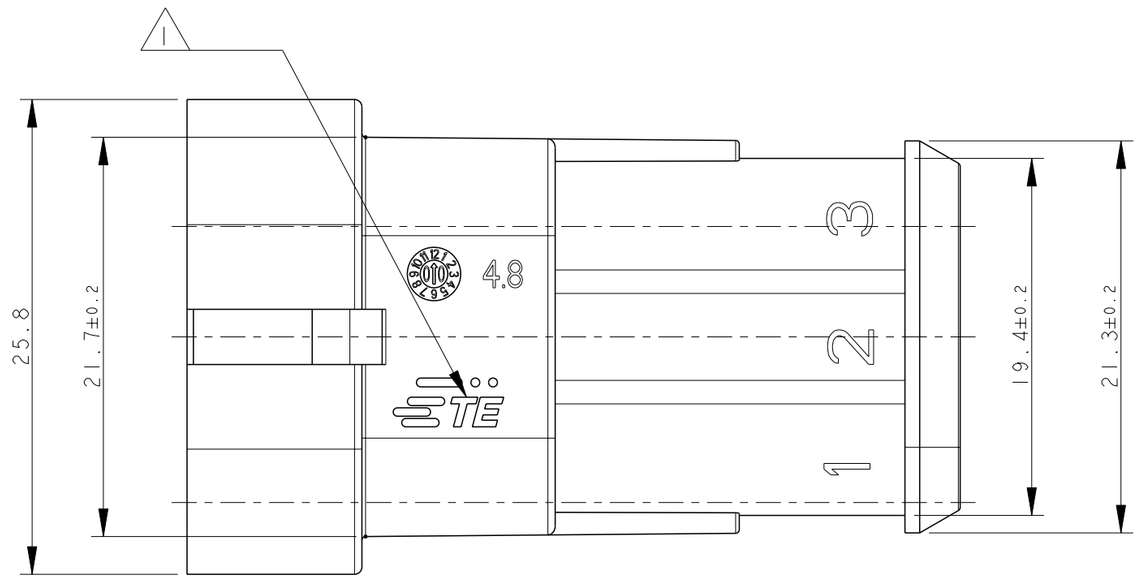

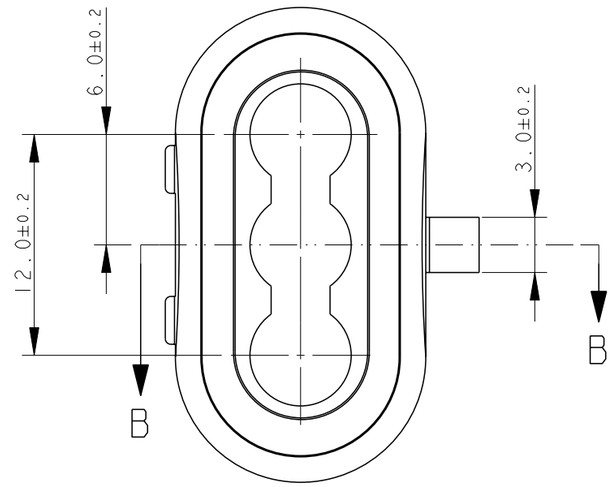

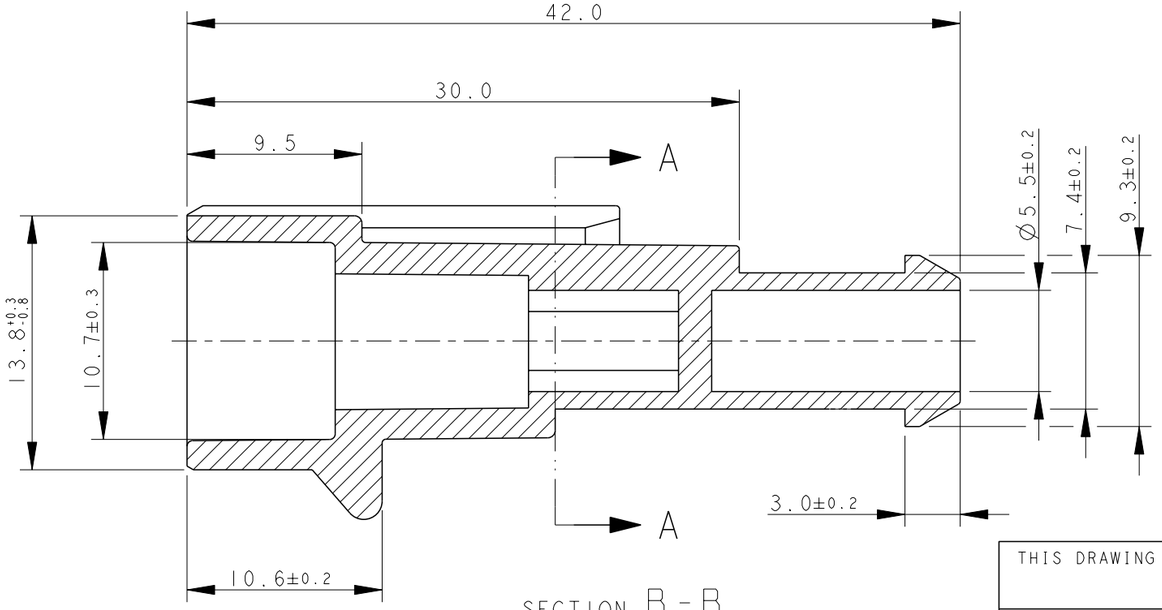

SECTION B-B

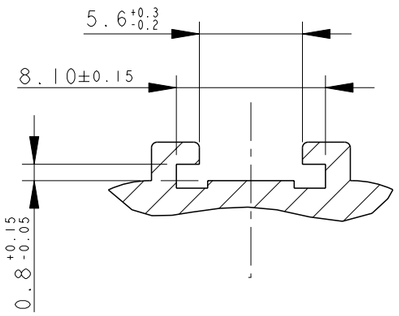

PART. SECTION A-A

BLACK	PA66 - GF	A	1745020-2
ORANGE		A	1745020-1
FINISH/COLOR	MATERIAL	REV	PART NUMBER

TE CONNECTIVITY TRADE MARK,
(IN ALTERNATIVE: "AMP" LOGO, OR "Tyco Electronics" LOGO)

THIS DRAWING IS A CONTROLLED DOCUMENT.

DIMENSIONS: mm

TOLERANCES UNLESS OTHERWISE SPECIFIED:
0 PLC ±-
1 PLC ± 0.3
2 PLC ±-
3 PLC ±-
4 PLC ±-
ANGLES ± 2°

MATERIAL - SEE TABLE

FINISH - SEE TABLE

DWN M. PALMA 13MAR2008
CHK R. MARTINI 130AR2008
APVD - -
PRODUCT SPEC -
APPLICATION SPEC -
WEIGHT -

CUSTOMER DRAWING

TE Connectivity

NAME
AMP SUPERSEAL 1.5 SRS.
3 POSITIONS TAB CONNECTOR
WITH CLOSED CAVITIES

SIZE	CAGE CODE	DRAWING NO	RESTRICTED TO
A3	00779	C-1745020	-

SCALE	SHEET	REV
3:1	1 OF 1	A3