THIS DRAWING IS UNPUBLISHED. RELEASED FOR PUBLICATION
© COPYRIGHT BY TYCO ELECTRONICS CORPORATION. ALL RIGHTS RESERVED.

LOC	DIST
DS	

REVISIONS

P	LTR	DESCRIPTION	DATE	DWN	APVD
	A	RELEASED	03.SEP.'07	CH	JK

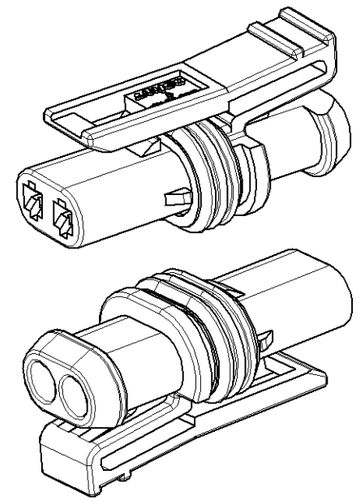

3D VIEW

<TABLE 2>

TYPE	WIRE SIZE(mm²)	PART NO.	WIRE INSULATION DIAMETER(mm)	COLOR
MTII	0.35~0.5	964971-1	1.2~1.6	RED
	0.5~0.75	963530-1	1.4~1.9	GRAY
	1.0	964972-1	1.9~2.1	YELLOW
		963531-1	CAVITY PLUG	WHITE

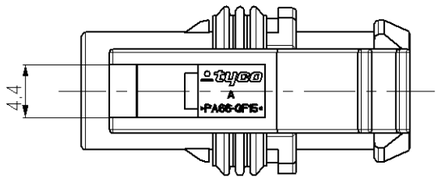

<TABLE 1>

TYPE	PART NO.	WIRE SIZE(mm²)	Insulation DIA(mm)	Applicable WIRE	FINISH
MTII	0-962875-1	0.2~0.5	1.2~1.6	AVSSXF 0.5 Max	CuSn4
	0-962875-3				CuSn4(GOLD)
	0-962876-1	0.5~1.0	1.4~2.1	AVSSXF 0.85 Max	CuSn4
	0-962876-3				CuSn4(GOLD)

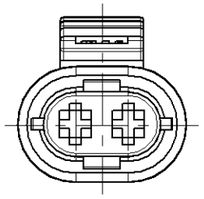

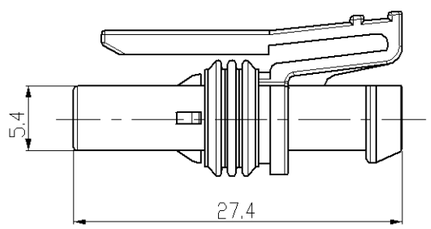

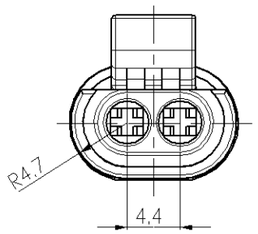

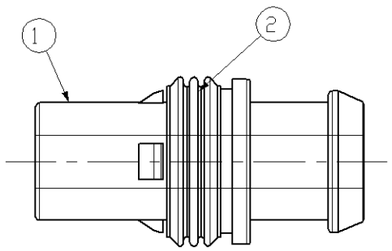

NOTE
1. GENERAL TOLERANCE:±0.3, ±3°
2. APPLICABLE RECEPTACLE CONTACT P/N:<TABLE 1>
3. APPLICABLE WIRE SEAL P/N:<TABLE 2>

ASS'Y P/N	1743695-2

NO	FINISH/COLOR	MATERIAL	DESCRIPTION	Q'TY
2	RED ORANGE	SILICONE	MTII SEALED 2P INNER SEAL	1
1	BLACK	PA66-GF15	MTII SEALED 2P PLUG HSG	1

THIS DRAWING IS A CONTROLLED DOCUMENT FOR TYCO ELECTRONICS CORPORATION. IT IS SUBJECT TO CHANGE AND THE CONTROLLING ENGINEERING ORGANIZATION SHOULD BE CONTACTED FOR THE LATEST REVISION.

DIMENSIONS: MM

3rd ANGLE PROJECTION

TOLERANCES UNLESS OTHERWISE SPECIFIED
0 PLC ±
1 PLC ±
2 PLC ±
3 PLC ±
4 PLC ±
ANGLES ±

MATERIAL: SEE TABLE

FINISH:

DWN: CH PARK
CHK: YM CHOI
APVD: JK SONG
PRODUCT SPEC:
APPLICATION SPEC:
WEIGHT:

CUSTOMER DRAWING

Tyco Electronics
AMP KOREA
kyungson, korea

NAME: MTII SEALED 2P ASS'Y FOR HOOD SWITCH

SIZE	CAGE CODE	DRAWING NO	RESTRICTED TO
A3	00779	C- 1743695	

SCALE 2:1 | SHEET 1 OF 1 | REV A