THIS DRAWING IS UNPUBLISHED. RELEASED FOR PUBLICATION –,– .
© COPYRIGHT – BY TYCO ELECTRONICS CORPORATION. ALL INTERNATIONAL RIGHTS RESERVED.

LOC	DIST
—	—

REVISIONS

P	LTR	DESCRIPTION	DATE	DWN	APVD
	1	NEW PROPOSAL PER RTS 258511.1	22DEC09	HMR	GP

1 PRODUCT PROVIDED ON STRIP FORM ON REELS; BREAKS MAY BE PRESENT

2 CRIMP WIDTH: .110 F TYPE (AMPLIVAR THRU TYPE)
CRIMP HEIGHT: (±.002) = (TOTAL CMA + 9360) / 190,400
GENERAL APPLICATION GUIDELINES MUST BE FOLLOWED
AS SPECIFIED IN CATALOG #82221 OR #82227
FOR APPLICATOR INFORMATION CALL: 1–800–722–1111
FOR PRODUCT INFORMATION CALL: 1–800–522–6752

3 PRELIMINARY–NOT FOR PRODUCTION

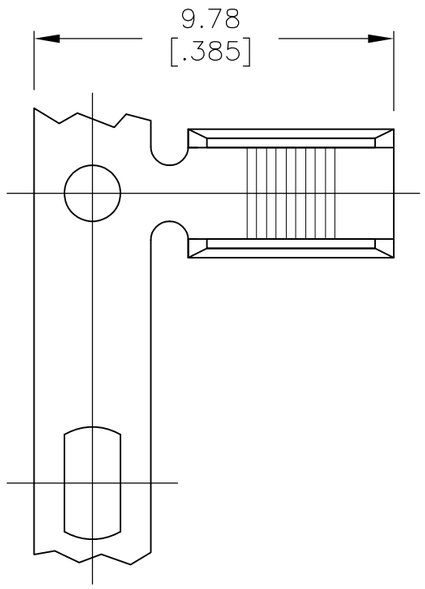

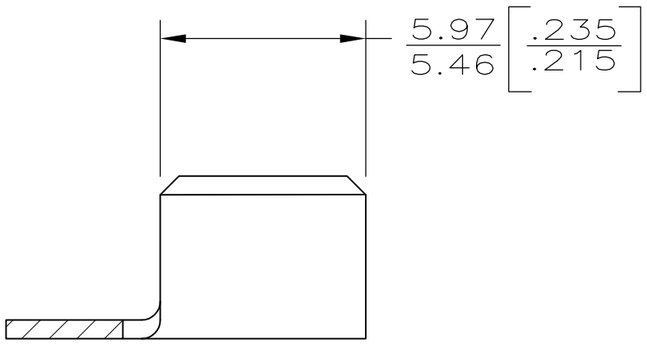

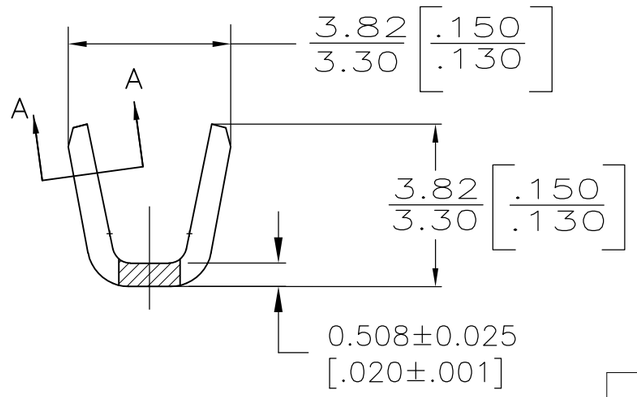

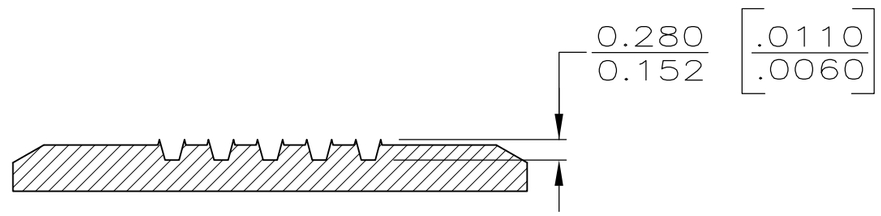

SECTION A–A
SCALE 15:1
ROTATED

WIRE RANGE	MATERIAL/FINISH	PART NUMBER
2 600–3000 CMA	BRASS/TIN	3 1742829–2
	BRASS/PLAIN	3 1742829–1

THIS DRAWING IS A CONTROLLED DOCUMENT.

DIMENSIONS: mm [INCHES]

TOLERANCES UNLESS OTHERWISE SPECIFIED:
0 PLC ± –
1 PLC ± –
2 PLC ± –
3 PLC ± 0.25 [.010]
4 PLC ± –
ANGLES ± –

MATERIAL: SEE TABLE
FINISH: SEE TABLE

METRIC

DWN RAGHAVENDRA HM 22DEC09
CHK PORTA GARY 22DEC09
APVD PORTA GRAY 22DEC09
PRODUCT SPEC —
APPLICATION SPEC 114–2009
WEIGHT —

Tyco Electronics
Tyco Electronics Corporation
Harrisburg, PA 17105–3608

NAME: SPLICE, AMPLIVAR, 5 SERRATIONS

SIZE	CAGE CODE	DRAWING NO	RESTRICTED TO
A3	00779	C–1742829	—

CUSTOMER DRAWING

SCALE	SHEET	REV
6:1	1 OF 1	1