THIS DRAWING IS UNPUBLISHED. RELEASED FOR PUBLICATION .19 .
© COPYRIGHT 19 BY AMP INCORPORATED. ALL RIGHTS RESERVED.

LOC	DIST
DY	-

REVISIONS

P	LTR	DESCRIPTION	DATE	DWN	APVD
	B	REVISED ECR-05-017828	13DEC05	LWY	VT

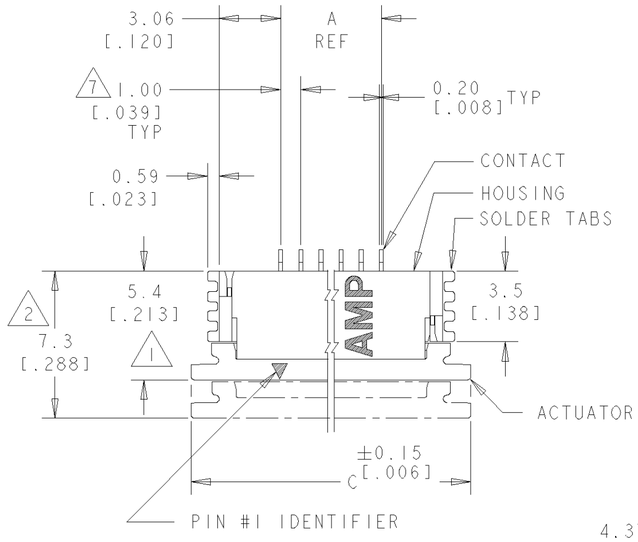

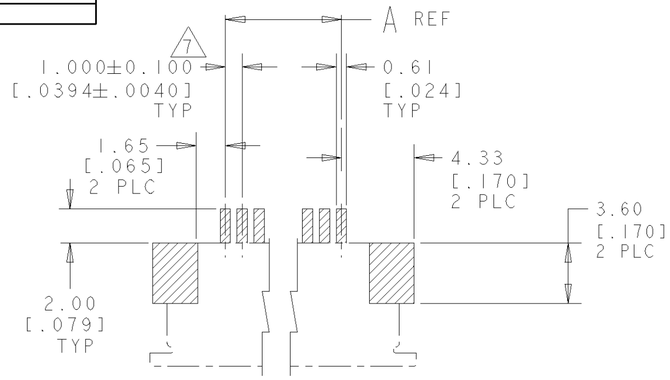

RECOMMENDED P.C. BOARD PAD PATTERN
COMPONENT SIDE

1. DIMENSION APPLIES WHEN ACTUATOR IS IN CLOSED POSITION.
2. DIMENSION APPLIES WHEN ACTUATOR IS IN OPEN POSITION.
3. MAXIMUM ENGAGEMENT LENGTH TO CONTACT POINT.
4. CONTACTS: 0.00005[.0.000002] MIN.
   AU FLASH OVER 0.0013[.000050] MIN. NICKEL.
5. SOLDER TABS: 0.0013[.000050] MIN.TIN.
6. PACKAGE PER EIA 481 SPECIFICATION.
7. TOLERANCE NON-CUMULATIVE.
8. MATERIAL: CONTACT: PHOSPHOR BRONZE.
   SOLDER TABS: PHOSPHOR BRONZE.
   HOUSING: GLASS REINFORCED POLYESTER (LCP), UL 94V-0, COLOR-NATURAL.
   ACTUATOR: GLASS REINFORCED NYLON (PPA), UL 94V-0 OR GLASS REINFORCED PPS, UL 94V-0, COLOR-BLACK.

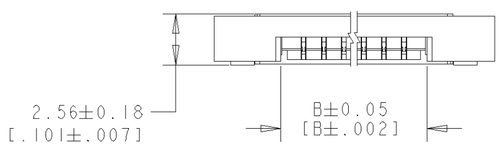

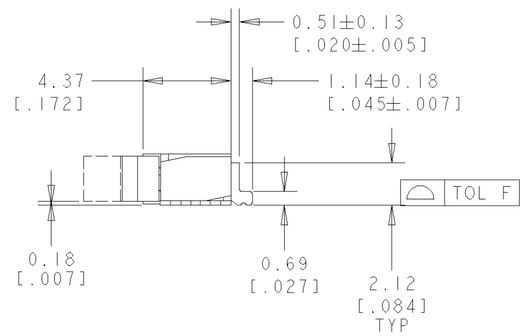

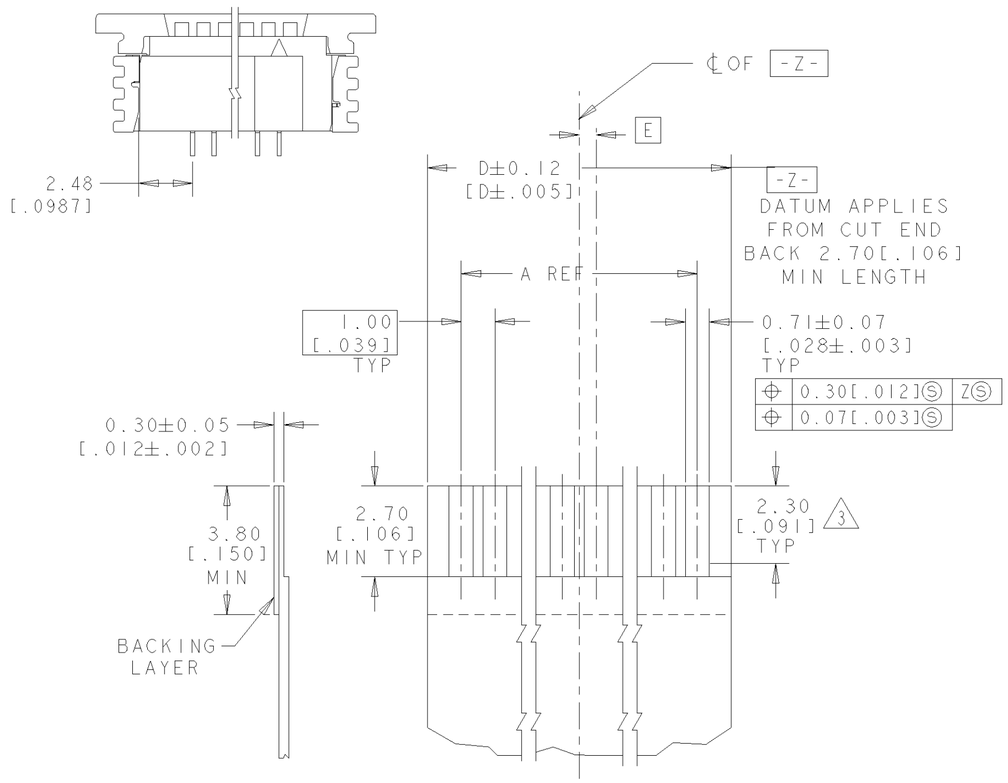

RECOMMENDED FPC LAYOUT
SCALE 8:1

	0.50 [0.0197]	31.00 [1.221]	37.92 [1.492]	31.18 [1.228]	29.0 [1.142]	30	3-1735265-0
	-	30.00 [1.181]	36.92 [1.454]	30.18 [1.188]	28.0 [1.102]	29	2-1735265-9
	0.50 [0.0197]	29.00 [1.142]	35.92 [1.414]	29.18 [1.149]	27.0 [1.063]	28	2-1735265-8
	-	28.00 [1.102]	34.92 [1.375]	28.18 [1.109]	26.0 [1.024]	27	2-1735265-7
	0.50 [0.0197]	27.00 [1.063]	33.92 [1.335]	27.18 [1.070]	25.0 [.984]	26	2-1735265-6
	-	26.00 [1.024]	32.92 [1.296]	26.18 [1.031]	24.0 [.945]	25	2-1735265-5
	0.50 [0.0197]	25.00 [.984]	31.92 [1.257]	25.18 [.991]	23.0 [.906]	24	2-1735265-4
	-	24.00 [.945]	30.92 [1.217]	24.18 [.952]	22.0 [.866]	23	2-1735265-3
	0.50 [0.0197]	23.00 [.906]	29.92 [1.179]	23.18 [.913]	21.0 [.827]	22	2-1735265-2
	-	22.00 [.866]	28.92 [1.139]	22.18 [.873]	20.0 [.787]	21	2-1735265-1
	0.50 [0.0197]	21.00 [.827]	27.92 [1.099]	21.18 [.834]	19.0 [.748]	20	2-1735265-0
	-	20.00 [.787]	26.92 [1.060]	20.18 [.794]	18.0 [.709]	19	1-1735265-9
	0.50 [0.0197]	19.00 [.748]	25.92 [1.020]	19.18 [.755]	17.0 [.669]	18	1-1735265-8
0.10 [.004]	-	18.00 [.709]	24.92 [.981]	18.18 [.716]	16.0 [.630]	17	1-1735265-7
	0.50 [0.0197]	17.00 [.669]	23.92 [.942]	17.18 [.676]	15.0 [.591]	16	1-1735265-6
	-	16.00 [.630]	22.92 [.902]	16.18 [.637]	14.0 [.551]	15	1-1735265-5
	0.50 [0.0197]	15.00 [.591]	21.92 [.863]	15.18 [.598]	13.0 [.512]	14	1-1735265-4
	-	14.00 [.551]	20.92 [.824]	14.18 [.558]	12.0 [.472]	13	1-1735265-3
	0.50 [0.0197]	13.00 [.512]	19.92 [.784]	13.18 [.519]	11.0 [.433]	12	1-1735265-2
	-	12.00 [.472]	18.92 [.745]	12.18 [.480]	10.0 [.394]	11	1-1735265-1
	0.50 [0.0197]	11.00 [.433]	17.92 [.705]	11.18 [.440]	9.0 [.354]	10	1-1735265-0
	-	10.00 [.394]	16.92 [.666]	10.18 [.401]	8.0 [.315]	9	1735265-9
	0.50 [0.0197]	9.00 [.354]	15.92 [.627]	9.18 [.361]	7.0 [.276]	8	1735265-8
	-	8.00 [.315]	14.92 [.587]	8.18 [.322]	6.0 [.236]	7	1735265-7
	0.50 [0.0197]	7.00 [.276]	13.92 [.548]	7.18 [.283]	5.0 [.197]	6	1735265-6
	-	6.00 [.236]	12.92 [.509]	6.18 [.243]	4.0 [.157]	5	1735265-5
	0.50 [0.0197]	5.00 [.197]	11.92 [.469]	5.18 [.204]	3.0 [.118]	4	1735265-4
F	E	D	C	B	A	POS.	PART NO.

THIS DRAWING IS A CONTROLLED DOCUMENT FOR AMP INCORPORATED. IT IS SUBJECT TO CHANGE AND THE CONTROLLING ENGINEERING ORGANIZATION SHOULD BE CONTACTED FOR THE LATEST REVISION.

DIMENSIONS: mm[INCHES]

TOLERANCES UNLESS OTHERWISE SPECIFIED:
0 PLC ±-
1 PLC ±-
2 PLC ±0.2 [.008]
3 PLC ±0.1 [.004]
4 PLC ±-
ANGLES ±-

MATERIAL 8
FINISH 4 5

DWN 8JUL05 WYLEE
CHK VINCENT TAN
APVD WI CHOO
PRODUCT SPEC 108-51074
APPLICATION SPEC -
WEIGHT -

tyco Electronics — Tyco Electronics Singapore Pte. Ltd.

NAME: 1mm FPC CONNECTOR, HORIZONTAL, SURFACE-MOUNT, BOTTOM CONTACT AU PLATED

SIZE A2 | CAGE CODE 00779 | DRAWING NO C-1735265

CUSTOMER DRAWING | SCALE 4:1 | SHEET 1 OF 1 | REV B

AMP 1471-9 REV 09MAY94

Pro/ENGINEER DRAWING