THIS DRAWING IS UNPUBLISHED. RELEASED FOR PUBLICATION 20
© COPYRIGHT 20 BY - ALL RIGHTS RESERVED.

REVISIONS

P	LTR	DESCRIPTION	DATE	DWN	APVD
	B6	REVISED PER ECO-15-015696	01DEC2015	DD	CS
	B7	REVISED PER ECO-16-018424	21DEC2016	DD	CS
	B8	REV PER ECN-22-189117	15DEC2022	SMR	CS
	B9	REV PER ECN-24-278690	05NOV2024	SMR	CS

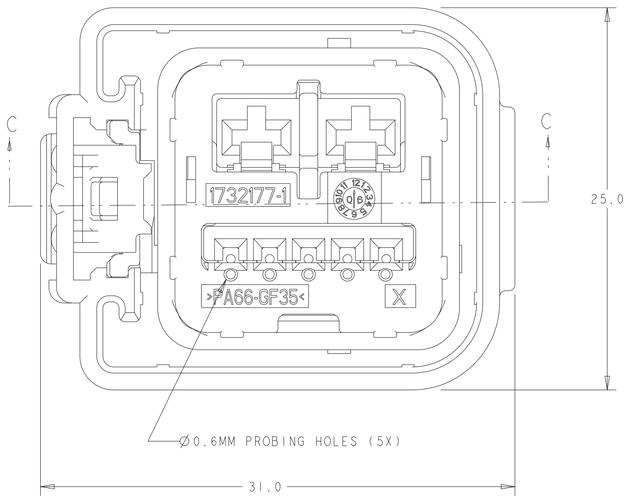

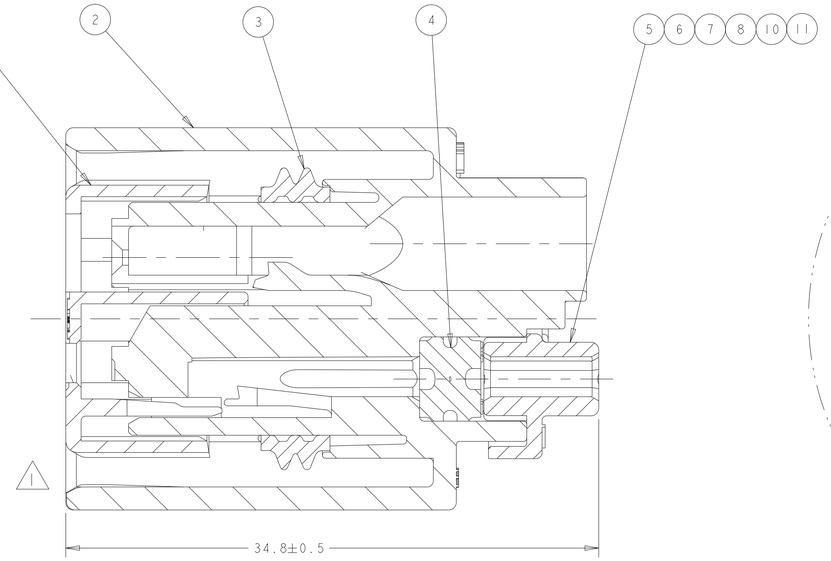

SECTION D-D

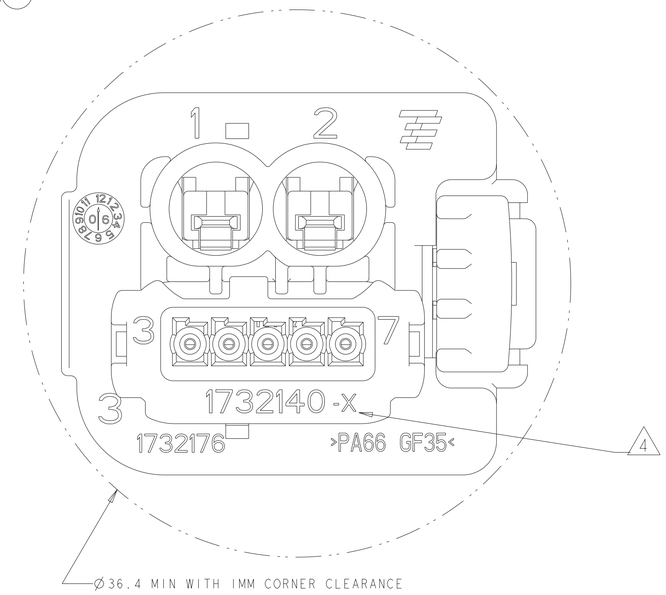

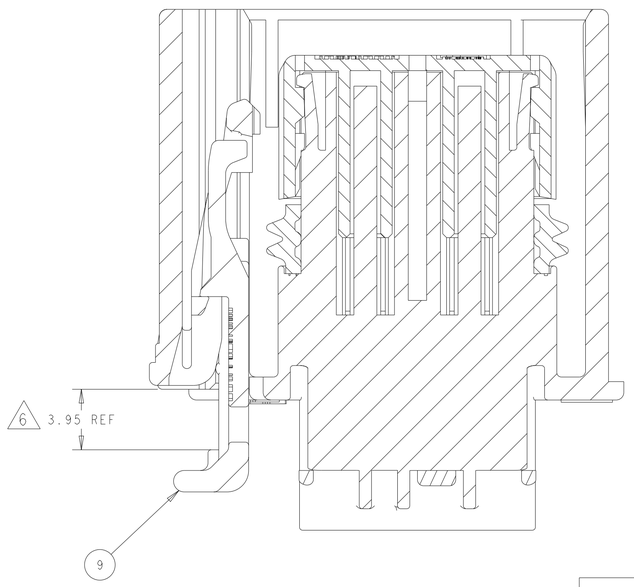

SECTION C-C

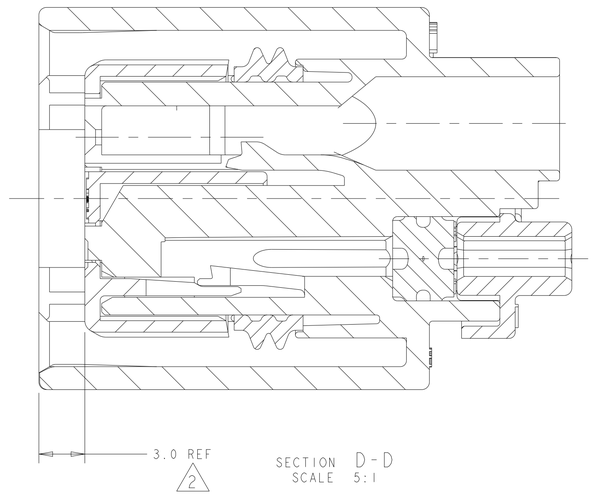

SECTION D-D
SCALE 5:1

1	2	3	4	5	6	7	TE PN	4 MARKING ON COVER
		X			X	X	1-1732175-6	1-1732140-2
					X	X	1-1732175-5	1732140-6
				X			1-1732175-4	1732140-5
			X	X			1-1732175-3	1732140-4
						X	1-1732175-2	1732140-3
							1-1732175-1	1732140-2
		X			X	X	1732175-6	1-1732140-2
					X	X	1732175-5	1732140-6
				X			1732175-4	1732140-5
			X	X			1732175-3	1732140-4
						X	1732175-2	1732140-3
							1732175-1	1732140-2

CAVITY NUMBERED X - INDICATES PLUGGED HOLE

BLANK CAVITY INDICATES OPEN HOLE

1--6	1--5	1--4	1--3	1--2	1--1	-6	-5	-4	-3	-2	-1	DESCRIPTION	MATERIAL	COLOUR	ITEM NO.
1	-	-	-	-	-	1	-	-	-	-	-	COVER1--2	>PA66-GF35<	BLACK	11
-	1	-	-	-	-	-	1	-	-	-	-	COVER-6	>PA66-GF15<	BLACK	10
1	1	1	1	1	1	-	-	-	-	-	-	CPA	>PA66-GF15<	RED	9
-	-	1	-	-	-	-	-	1	-	-	-	COVER-5	>PA66-GF35<	BLACK	8
-	-	-	1	-	-	-	-	-	1	-	-	COVER-4	>PA66-GF35<	BLACK	7
-	-	-	-	1	-	-	-	-	-	1	-	COVER-3	>PA66-GF35<	BLACK	6
-	-	-	-	-	1	-	-	-	-	-	1	COVER-2	>PA66-GF35<	BLACK	5
1	1	1	1	1	1	1	1	1	1	1	1	GROMMET	SILICONE RUBBER	ORANGE	4
1	1	1	1	1	1	1	1	1	1	1	1	SEAL	SILICONE RUBBER	BLUE	3
1	1	1	1	1	1	1	1	1	1	1	1	HOUSING	>PA66-GF35<	BLACK	2
1	1	1	1	1	1	1	1	1	1	1	1	TPA	>PA66-GF35<	RED	1
QTY PER ASSY															

TE PN 1732175

1. CONDITION AS SUPPLIED: TPA IN PRE-LOCKED POSITION
2. TPA IN LOCKED POSITION AS SHOWN. TRAVEL DISTANCE 3 REF.
3. MATES WITH USCAR INTERFACE 999-S-007-2-A01.
4. MARKING ON COVER.
5. APPLICABLE INSTRUCTION SHEET: 408-10106.
6. OPTIONAL CPA IN PRE-LOCKED POSITION.

APPLICABLE COMPONENTS (REF)				WIRE SIZE AWG (OR METRIC EQIVALENT)	MATERIAL
DESCRIPTION	COLOR/ PLATING	SUPPLIER	TE PN		
TERMINAL 064	TIN	TE	2035334-1	20-22	C5111 CuSn4
TERMINAL 064	TIN	TE	2035334-2	18	C5111 CuSn4
TERMINAL 2.8	TIN	TE	1326032-2	20	C64760
TERMINAL 2.8	TIN	TE	1326032-3	18	C64760
TERMINAL 2.8	TIN	TE	1326032-4	16	C64760
TERMINAL 2.8	TIN	TE	1326032-5	14	C64760
TERMINAL 2.8	TIN	TE	1326032-6	12	C64760
CABLE SEAL 2.8	GREEN	YAZAKI	7158-3111-60	1.2-1.9 mm (WIRE O.D.)	
CABLE SEAL 2.8	YELLOW	YAZAKI	7158-3112-70	1.8-2.3 mm (WIRE O.D.)	
CABLE SEAL 2.8	WHITE	YAZAKI	7158-3113-40	2.1-3.0 mm (WIRE O.D.)	
CABLE SEAL 2.8	LT GRAY	YAZAKI	7158-3110-40	3.1-3.3 mm (WIRE O.D.)	

THIS DRAWING IS A CONTROLLED DOCUMENT.

DIMENSIONS: mm

TOLERANCES UNLESS OTHERWISE SPECIFIED:
0 PLC ±-
1 PLC ±0.4
2 PLC ±0.25
3 PLC ±.
4 PLC ±.
ANGLES ±-

MATERIAL - -
FINISH - -

DWN A. HUANG 18MAY2006
CHK J. DAWIDZIUK 18MAY2006
APVD G. GOTO 18MAY2006
PRODUCT SPEC -
APPLICATION SPEC -
WEIGHT -

TE Connectivity

NAME ASSEMBLY, 2X5 SEALED, CONNECTOR -

SIZE	CAGE CODE	DRAWING NO	RESTRICTED TO
A1	00779	C-1732175	-

CUSTOMER DRAWING SCALE 5:1 SHEET 1 OF 1 REV B9

4805 (3/13)