THIS DRAWING IS UNPUBLISHED. RELEASED FOR PUBLICATION -
© COPYRIGHT - y ALL RIGHTS RESERVED.

LOC	DIST
IR	-

REVISIONS

P	LTR	DESCRIPTION	DATE	DWN	APVD
	A1	ECR-09-005303	06MAR09	PS	JB
	A2	ECR-11-010161	16MAY2011	GG	RRP

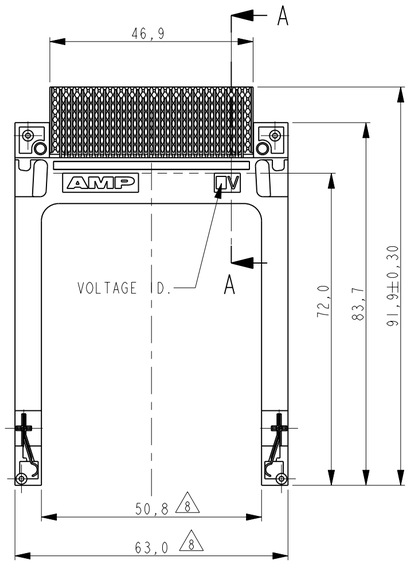

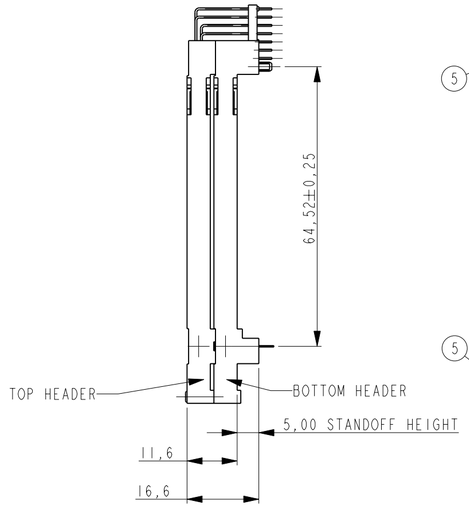

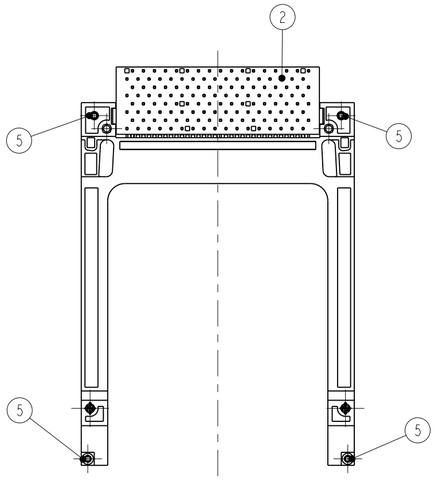

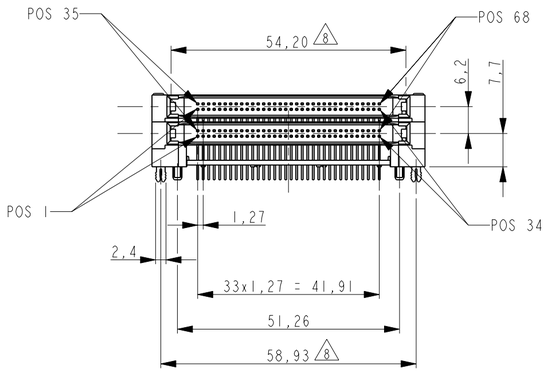

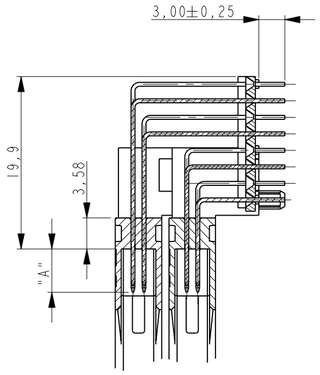

SECTION A-A
SCALE 2:1

NOTES/SPECIFICATION:

1 TOP HEADER ACCEPTS TYPES I, II, & III AND BOTTOM HEADER ACCEPTS TYPES I & II, - OF PCMCIA STANDARD MEMORY CARD

2 MECHANICAL SPECIFICATION:
- 2.1. DURABILITY
  - 2.1.1. OFFICE ENVIRONMENT: 10000 CYCLES MINIMUM
  - 2.1.2. HARSH ENVIRONMENT: 5000 CYCLES
- 2.2. CONTACT RETENTION FORCE: 1 kg MINIMUM

3 ELECTRICAL SPECIFICATION:
- 3.1. CONTACT RESISTANCE: 40 MILLI OHMS MAX.
- 3.2. DIELECTRIC WITHSTANDING VOLTAGE: 500 Vrms FOR 1min.
- 3.3. INSULATION RESISTANCE: 1000 MEGA OHMS MIN.
- 3.4. CURRENT CAPACITY: 0,5 AMPS PER PIN.

4. ENVIRONMENTAL SPECIFICATIONS:
- 4.1. STORAGE ENVIRONMENT: -40°C TO +70°C, 95% MAX. RELATIVE HUMIDITY (NON CONDENSING)
- 4.2. OPERATION TEMPERATURE: -20°C TO +60°C, 95% MAX. RELATIVE HUMIDITY (NON CONDENSING)
- 4.3. THERMAL SHOCK: 6 CYCLES (1 CYCLE PER HOUR) WITH CONNECTOR ENGAGED WITH EXTREMES OF -55°C TO +70°C.

5 LENGTH OF CONTACTS OFBOTH HEADERS:

DIM "A"	POSITION No.
5	1,17,34,35,51,68
3.5	36,67
4.25	THE OTHERS

6 PLATING OF CONTACT: Ni: 1,5µm MIN. (OVERALL)
Au: 0,2µm MIN. (CARD SIDE)
TIN: 2µm MIN. (PCB SIDE)

7 ALL PARTS PACKAGED IN TRAYS UNLESS REQUESTED:

8 MEASURING METHOD: MEASURE THESE DIMENSION, BY FIXING THE CONNECTOR TO THE STANDARD GAUGE.

CONNECTOR TO PRINTED CIRCUIT BOARD ASSEMBLY:

1. PLACE THE CONNECTOR ON THE PRINTED CIRCUIT BOARD. THE SOLDER TAILS, RETENT CLIPS & PLASTIC LEGS SHOULD BE SEATED IN THE RESPECTIVE HOLES

2. PUSH FIRMELY DOWN ON CENTER OF PLASTIC LEGS THEN SOLDER RETENTS. A SLIGHT SNAP IS FELT WHEN THE CONTACT IS FULLY SEATED.

3. SOLDER PROCESS ENTIRE PRINTED CIRCUIT BOARD ASSEMBLY

RECOMMENDED PCB LAYOUT, COMPONENT SIDE
(THICKNESS: 1,60mm±0,1mm)

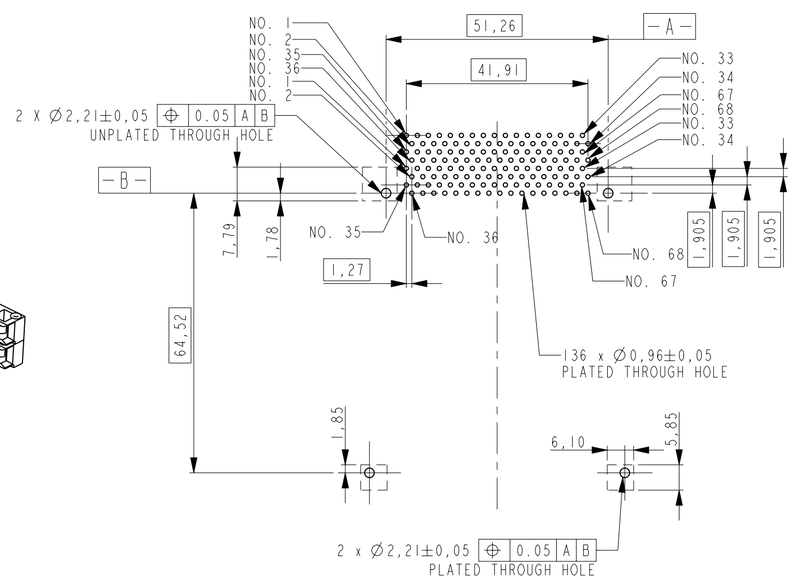

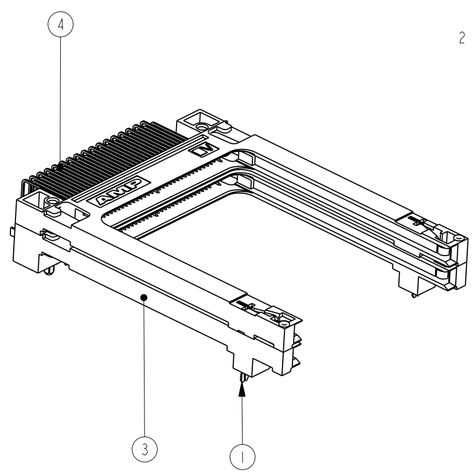

	3.3V	0-1705876-2	3.3 VOLT PC-CARD HEADER BOTTOM MOUNT	
	5.0V	0-1705876-1	5.0 VOLT PC-CARD HEADER BOTTOM MOUNT	
	VOLTAGE IDENTIFICATION	PARTNUMBER	HEADER TYPE	

ITEM NO	QTY	DESCRIPTION	MATERIAL	FINISH
5	4	RIVET	BRASS	-
4	136	CONTACT	COPPER ALLOY	6
3	2	HOUSING	THERMOPLASTIC UL 94 V0	COLOR: BLACK
2	1	ORGANISER	THERMOPLASTIC UL 94 V0	COLOR: BLACK
1	1	GROUND CONTACT	PHOSPHOR BRONZE	TIN: 2µm MIN.

THIS DRAWING IS A CONTROLLED DOCUMENT.

DIMENSIONS: mm

TOLERANCES UNLESS OTHERWISE SPECIFIED:
0 PLC ±0.3
1 PLC ±0.2
2 PLC ±0.1
3 PLC ±0.05
4 PLC ±-
ANGLES ±-

MATERIAL -
FINISH -

DWN P.Willems 20-Apr-05
CHK R.vd.Sandt -
APVD J.Broeksteeg -
PRODUCT SPEC 108-19201
APPLICATION SPEC -
WEIGHT -

TE Connectivity

NAME STACKED PC-CARD HEADER 5mm BOTTOM MOUNT VERSION

SIZE	CAGE CODE	DRAWING NO	RESTRICTED TO
A2	00779	C-1705876	-

CUSTOMER DRAWING | SCALE 1:1 | SHEET 1 OF 1 | REV A2

1471-9 (3/11)

Pro/ENGINEER DRAWING