THIS DRAWING IS UNPUBLISHED. RELEASED FOR PUBLICATION 20
© COPYRIGHT 20 BY - ALL RIGHTS RESERVED.

LOC	DIST
H	-

REVISIONS

P	LTR	DESCRIPTION	DATE	DWN	APVD
	A	EH10-0205-04	30SEP2004	WJ	PJ
	A1	ECR-05-009571	28SEP2005	WJ	PJ
	A2	ECR-12-018887	06NOV2012	RK	JHA

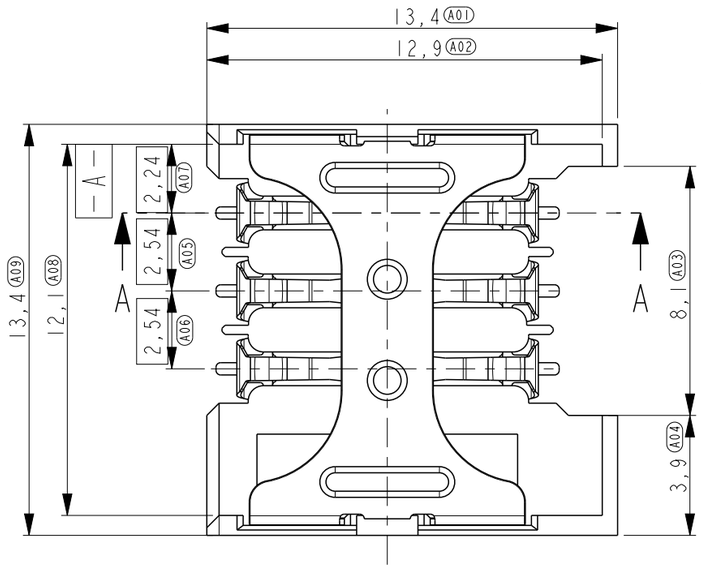

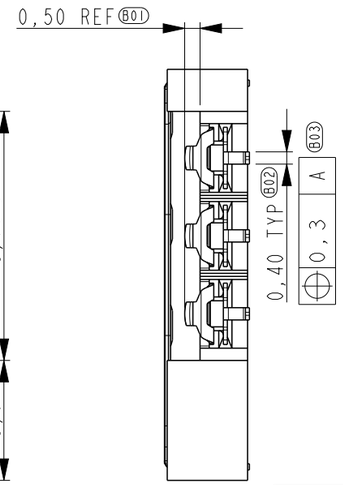

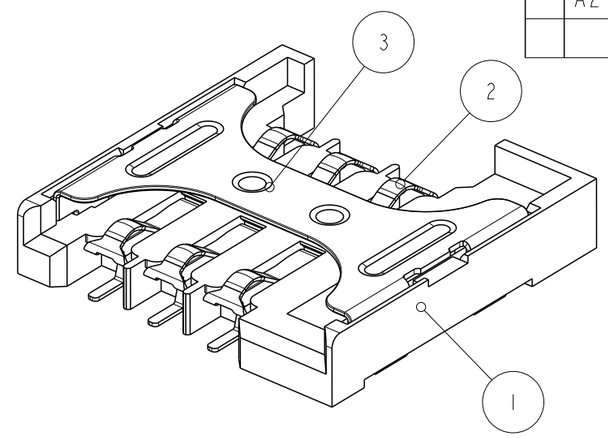

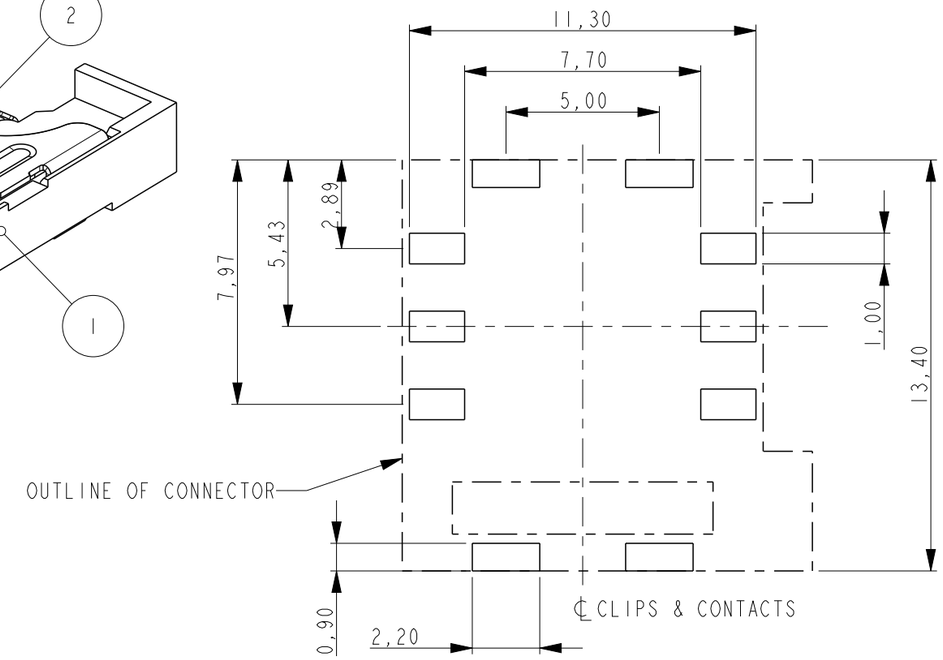

RECOMMENDED PCB LAYOUT (REF.)

CONCEPTUAL PRODUCT NOT FOR PRODUCTION

THIS PRODUCT HAS NOT COMPLETED VALIDATION TESTING

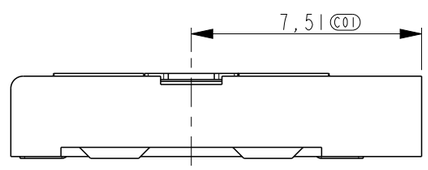

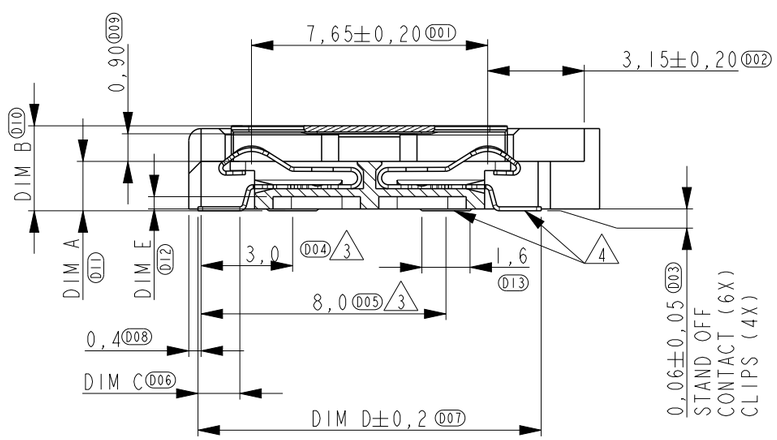

SECTION A-A

NOTES:

1. PLATING:
   1,3µm MIN. NICKEL ALL OVER
   0,2µm MIN. GOLD OVER 1,0 µm Pd-Ni ON CONTACT AREA
   3,0µm MIN. TIN ON SOLDER AREA
2. PLATING:
   1,3µm MIN. NICKEL ALL OVER
   1,0µm MIN. TIN ON SOLDER AREA
3. DIMENSION MEASURED FROM PLASTIC TO CENTER OF CLIPS
4. COPLANARITY 0,10 MAX. MEASURED ON 6 CONTACTS AND 4 CLIP PEGS IN ONE PASS

	PARTNUMBER	DIM A	DIM B	DIM C	DIM D	DIM E
	1-1705813-9	1,90	3,10	1,1	10,5	0,7
	1-1705813-8	1,80	3,00	1,2	10,7	0,6
	1-1705813-7	1,70	2,90	1,3	10,9	0,5
OBSOLETE	~~1-1705813-6~~	1,60	2,80	1,4	11,1	0,4
OBSOLETE	~~1-1705813-5~~	1,50	2,70	1,1	10,5	0,3
	1-1705813-4	1,40	2,60	1,2	10,7	0,2
OBSOLETE	~~1-1705813-3~~	1,30	2,50	1,3	10,9	0,1
	1-1705813-2	1,20	2,40	1,4	11,1	0,0

~~1-1705813-6~~ AS SHOWN

OBSOLETE

ITEM NO.	DESCRIPTION	MATERIAL	FINISH
3	CLIP	COPPER ALLOY	2
2	CONTACT	COPPER ALLOY	1
1	HOUSING	PLASTIC, GF	BLACK

THIS DRAWING IS A CONTROLLED DOCUMENT.

DIMENSIONS: mm

TOLERANCES UNLESS OTHERWISE SPECIFIED:
0 PLC ±-
1 PLC ±0,1
2 PLC ±0,10
3 PLC ±-
4 PLC ±-
ANGLES ±-

MATERIAL -
FINISH -

DWN W. Jansen 30-Sep-04
CHK W. Jansen 30-Sep-04
APVD P. Jaeger 30-Sep-04
PRODUCT SPEC -
APPLICATION SPEC -
WEIGHT -

TE Connectivity

NAME SCALABLE SLIDING SIM CONNECTOR FOR MINI-UICC
-

SIZE	CAGE CODE	DRAWING NO	RESTRICTED TO
A3	00779	C-1705813	-

Customer Drawing | SCALE 5:1 | SHEET 1 OF 1 | REV A2