THIS DRAWING IS UNPUBLISHED. RELEASED FOR PUBLICATION -,- .
© COPYRIGHT - BY TYCO ELECTRONICS CORPORATION. ALL RIGHTS RESERVED.

LOC	DIST
ES	00

REVISIONS

P	LTR	DESCRIPTION	DATE	DWN	APVD
	A	INITIAL RELEASE	18NOV2010	RC	SY

CONNECTOR ASSEMBLY EXAMPLARY LOADED (9)

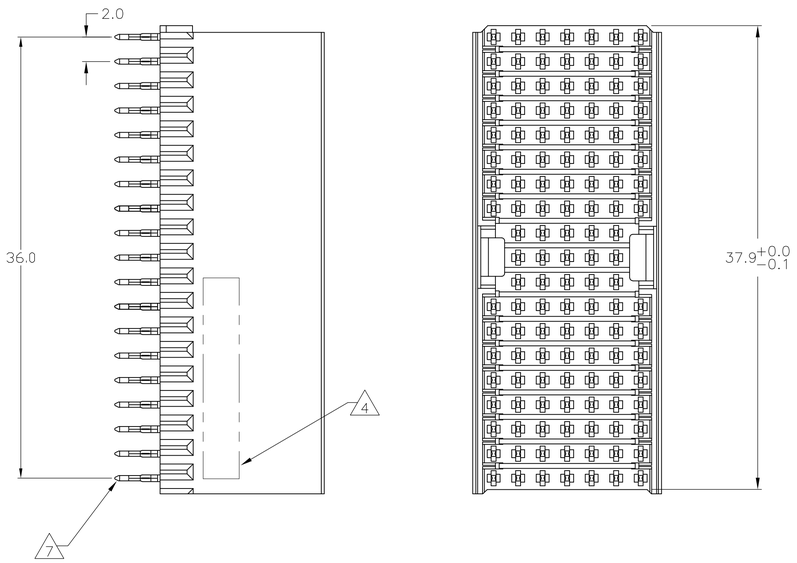

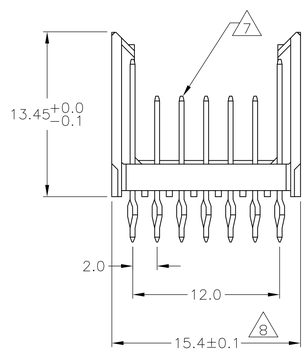

CONTACT DIMENSIONS

SCALE 5:1

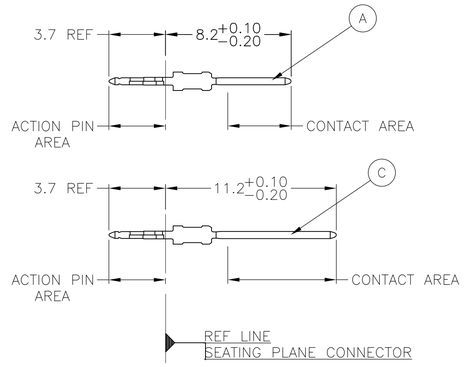

CONTACT LAYOUT

	z	a	b	c	d	e	f
1	C	A	A	A	A	A	C
2	C	A	A	A	A	A	C
3	C	A	A	A	A	A	C
4	C	A	A	A	A	A	C
5	C	A	A	A	A	A	C
6	C	A	A	A	A	A	C
7	C	A	A	A	A	A	C
8	C	A	A	A	A	A	C
9		A	A	A	A	A	
10		A	A	A	A	A	
11		A	A	A	A	A	
12	C	A	A	A	A	A	C
13	C	A	A	A	A	A	C
14	C	A	A	A	A	A	C
15	C	A	A	A	A	A	C
16	C	A	A	A	A	A	C
17	C	A	A	A	A	A	C
18	C	A	A	A	A	A	C
19	C	A	A	A	A	A	C

RECOMMENDED PCB-HOLE LAYOUT COMPONENT SIDE SHOWN

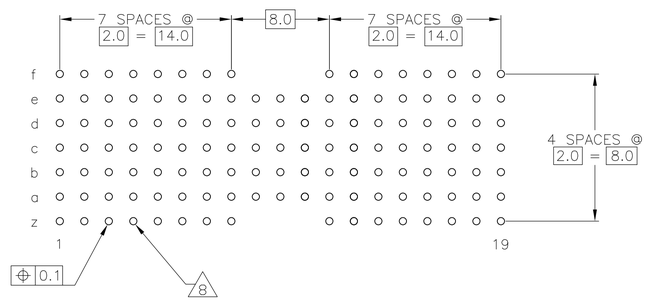

PLATED THRU HOLES PARAMETERS

REFERENCE APPLICATION SPECIFICATION

(2) FINISH	(3) PART NUMBER
	1645590-1

THIS DRAWING IS A CONTROLLED DOCUMENT.

DIMENSIONS: mm

TOLERANCES UNLESS OTHERWISE SPECIFIED:
0 PLC ±
1 PLC ± 0.1
2 PLC ± ±0.2
3 PLC ±
4 PLC ±
ANGLES ±

MATERIAL (1)

FINISH: SEE TABLE

DWN RAYMOND CAO 11/18/2010
CHK SANDERS YAN 11/18/2010
APVD MANQIAN WANG 11/18/2010

PRODUCT SPEC: 108-19082
APPLICATION SPEC: 114-19029
WEIGHT: —

Tyco Electronics
Tyco Electronics Corporation
Shanghai P.R.China 200233

NAME: MALE ASSEMBLY, Z-PACK 2mm HM, TYPE A/B

SIZE	CAGE CODE	DRAWING NO	RESTRICTED TO
A1	00779	C-1645590	—

CUSTOMER DRAWING | SCALE 4:1 | SHEET 1 OF 2 | REV A

THIS DRAWING IS UNPUBLISHED. RELEASED FOR PUBLICATION -.- .
© COPYRIGHT - BY TYCO ELECTRONICS CORPORATION. ALL RIGHTS RESERVED.

LOC	DIST
AD	00

REVISIONS

P	LTR	DESCRIPTION	DATE	DWN	APVD
	-	SEE SHEET 1	-	-	-

1. MATERIAL:
   CONTACT: PHOSPHOR BRONZE.
   HOUSING: GLASS-FILLED POLYESTER.

2. GENERAL PLATING SPECIFICATION: UNDERPLATING
   (ENTIRE CONTACT): 1.27μm MIN NICKEL AND ACTION
   PIN: 0.5μm MIN TIN/LEAD.
   1.26μm MIN. GOLD PLATING AT MATING SURFACES.

3. CONFORMS TO ALL TESTING ACCORDING TO IEC 61076-4-101
   PERFORMANCE LEVEL 1.

4. CONNECTOR MARKED WITH PART NUMBER AND DATE CODE.
   ADDITIONAL CHARACTERS OR MARKINGS, AS WELL AS THE LOCATION OF THE MARKINGS,
   MAY BE ADDED FOR TRACEABILITY BASED UPON MANUFACTURERS DISCRETION.

5. PLATED-THROUGH HOLES AT 2x2mm SQUARE GRID
   PATTERN DEFINED BY CONTACT LAYOUT.

6. FOR ACTUAL PIN LOADING SEE "CONTACT LAYOUT".

7. FOR ACTUAL PIN DIMENSIONS SEE "CONTACT DIMENSIONS".

8. TO BE MEASURED AT BOTTOM OF SHROUD.

THIS DRAWING IS A CONTROLLED DOCUMENT.

DIMENSIONS: mm

TOLERANCES, UNLESS OTHERWISE SPECIFIED:
0 PLC ± -
1 PLC ± 0.1
2 PLC ± -
3 PLC ± -
4 PLC ± -
ANGLES ± -
±0.2

MATERIAL: SEE SHEET 1
FINISH: SEE SHEET 1

DWN B.CARBO 07SEP05
CHK G.SKIPPER 07SEP05
APVD G.SKIPPER 07SEP05
PRODUCT SPEC 108-19082
APPLICATION SPEC 114-19029
WEIGHT -

Tyco Electronics
Tyco Electronics Corporation
Shanghai P.R.China 200233

NAME: MALE ASSEMBLY, Z-PACK 2mm HM, TYPE A/B

SIZE	CAGE CODE	DRAWING NO	RESTRICTED TO
A1	00779	C-1645590	-

CUSTOMER DRAWING | SCALE 4:1 | SHEET 2 OF 2 | REV A

AMP 4805 REV 31MAR2000