© 2022TE Connectivity. All Rights Reserved.

REVISIONS

P	LTR	DESCRIPTION	DATE	DWN	APVD
	BA	NEW RELEASE	02AUG2010	PT	St.P
	BA1	CLARIFICATION NOTE ADDED	18APR2022	DM	AP
	BA2	DIMENSION TOLERANCE CORRECTION	03OCT2024	KA	RSS

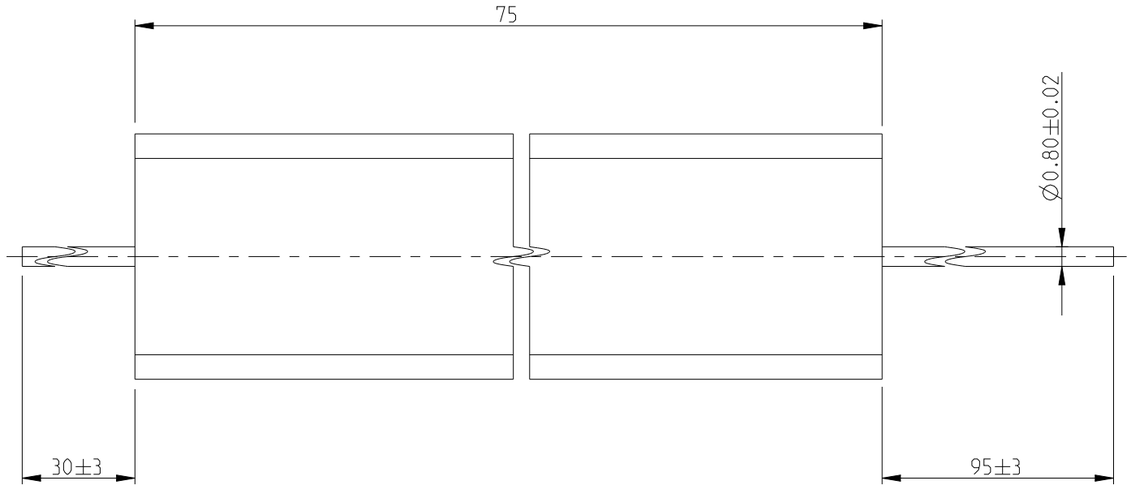

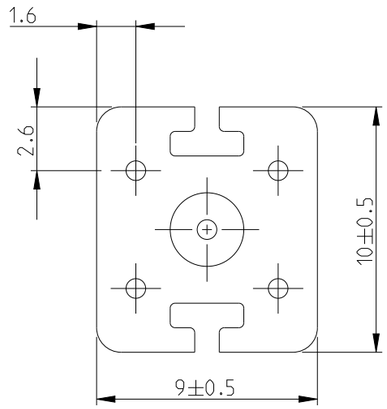

NOTES:

1. FOR FURTHER INFORMATION SEE DATA SHEET FOR SERIES TYPE SBC(SQUARE CERAMIC), HIGH POWER RESISTORS

2. THE HOLES AND FLUTES SHOWN IN THE CERAMIC CASING ARE PURELY FOR MOUNTING PURPOSES AND DO NOT IN ANY WAY AFFECT THE DISSIPATION CAPABILITIES OF THE RESISTOR. THEY CAN OFTEN BECOME BLOCKED DURING THE MANUFACTURING PROCESS. THIS WILL NOT AFFECT THE PERFORMANCE IN ANY WAY.

RoHS Compliant

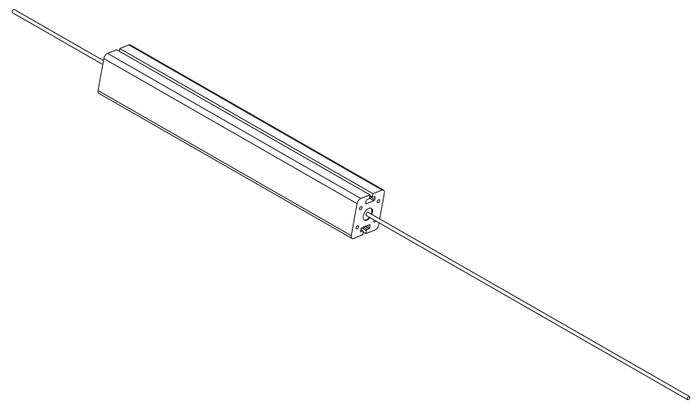

THIS DRAWING IS A CONTROLLED DOCUMENT.

DIMENSIONS: mm

TOLERANCES UNLESS OTHERWISE SPECIFIED:

0 PLC	±0.2
1 PLC	±0.1
2 PLC	±-
3 PLC	±-
4 PLC	±-
ANGLES	±5°

MATERIAL: -

FINISH: -

DWN PARUSURAM.T 02AUG2010
CHK STEPHEN.P 02AUG2010
APVD STEPHEN.P 02AUG2010
PRODUCT SPEC -
APPLICATION SPEC -
WEIGHT 15g

TE Connectivity

NAME HIGH POWER RESISTOR TYPE SBC (SQUARE CERAMIC) SERIES SBCHE15

SIZE	CAGE CODE	DRAWING NO	RESTRICTED TO
A3	00779	C-1623729	-

CUSTOMER DRAWING | SCALE 4:1 | SHEET 1 OF 1 | REV BA2

1470-19 (3/13)