© 2025 TE Connectivity. All Rights Reserved.

REVISIONS

P	LTR	DESCRIPTION	DATE	DWN	APVD
	BA	NEW RELEASE	19FEB2010	MRS	ST.P
	BA1	DRAWING DIMENSION UPDATE	03JUN2025	RS	GT

FOR FURTHER INFORMATION SEE DATA SHEET FOR
SERIES LR, METAL FILM FIXED RESISTORS

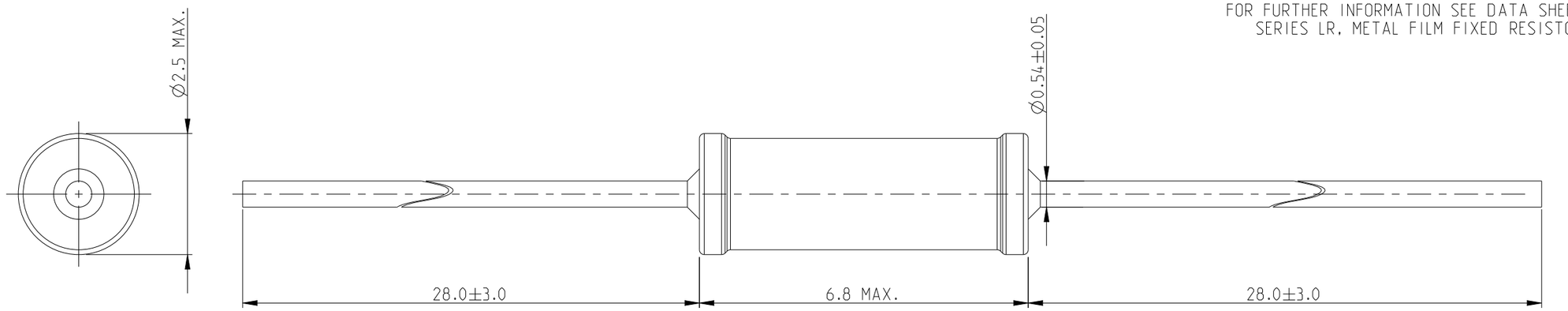

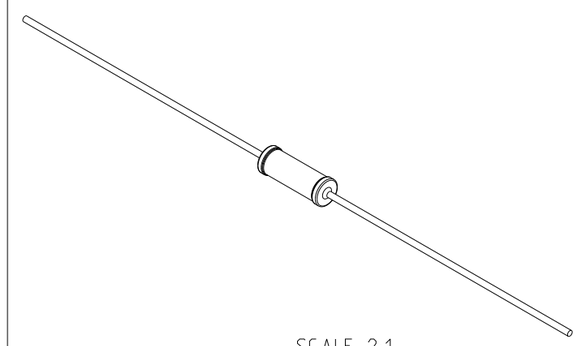

SCALE 2:1

RoHS Compliant

THIS DRAWING IS A CONTROLLED DOCUMENT.

DIMENSIONS: mm

TOLERANCES UNLESS OTHERWISE SPECIFIED:

0 PLC	±0.2
1 PLC	±0.1
2 PLC	±-
3 PLC	±-
4 PLC	±-
ANGLES	±5°

MATERIAL: -

FINISH: -

DWN MAHARUDRA 19-FEB-10
CHK ALLAN.P 19-FEB-10
APVD STEPHEN.P 19-FEB-10
PRODUCT SPEC -
APPLICATION SPEC -
WEIGHT -

TE Connectivity

NAME
METAL FILM FIXED RESISTORS
TYPE LR1 SERIES

SIZE	CAGE CODE	DRAWING NO	RESTRICTED TO
A3	00779	C-1622435	-

CUSTOMER DRAWING | SCALE 10:1 | SHEET 1 OF 1 | REV BA1

1470-19 (3/13)