© 2025 TE Connectivity. All Rights Reserved.

REVISIONS

| P | LTR | DESCRIPTION | DATE | DWN | APVD |
|---|---|---|---|---|---|
| | BA | NEW RELEASE | 19FEB2010 | MRS | ST.P |
| | BA1 | DRAWING DIMENSION UPDATE | 03JUN2025 | RS | GT |
| | | | | | |
| | | | | | |

FOR FURTHER INFORMATION SEE DATA SHEET FOR
SERIES LR, METAL FILM FIXED RESISTORS

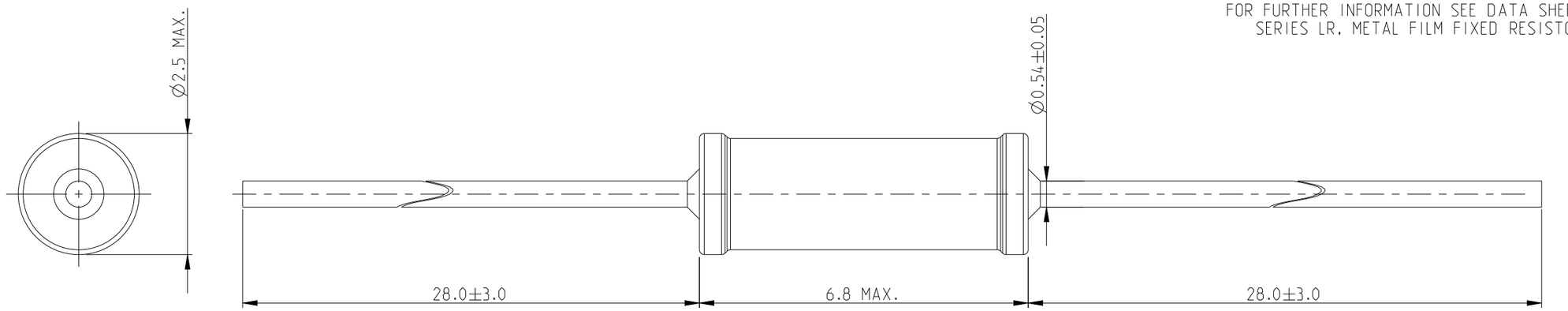


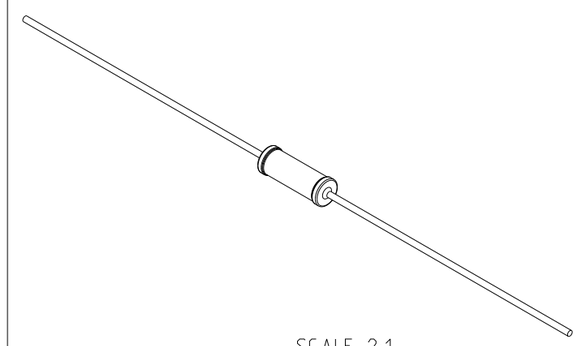

SCALE 2:1

RoHS Compliant

THIS DRAWING IS A CONTROLLED DOCUMENT.

DIMENSIONS: mm

TOLERANCES UNLESS OTHERWISE SPECIFIED:

| | |
|---|---|
| 0 PLC | ±0.2 |
| 1 PLC | ±0.1 |
| 2 PLC | ±- |
| 3 PLC | ±- |
| 4 PLC | ±- |
| ANGLES | ±5° |

MATERIAL: -

FINISH: -

DWN MAHARUDRA 19-FEB-10
CHK ALLAN.P 19-FEB-10
APVD STEPHEN.P 19-FEB-10
PRODUCT SPEC -
APPLICATION SPEC -
WEIGHT -

TE Connectivity

NAME
METAL FILM FIXED RESISTORS
TYPE LR1 SERIES

| SIZE | CAGE CODE | DRAWING NO | RESTRICTED TO |
|---|---|---|---|
| A3 | 00779 | C-1622320 | - |

CUSTOMER DRAWING | SCALE 10:1 | SHEET 1 OF 1 | REV BA1

1470-19 (3/13)