THIS DRAWING IS UNPUBLISHED. RELEASED FOR PUBLICATION -,- .
© COPYRIGHT - By - ALL RIGHTS RESERVED.

LOC	DIST
J	—

REVISIONS

P	LTR	DESCRIPTION	DATE	DWN	APVD
	D	REV PER ECO-14-017355	17NOV14	JR	TM

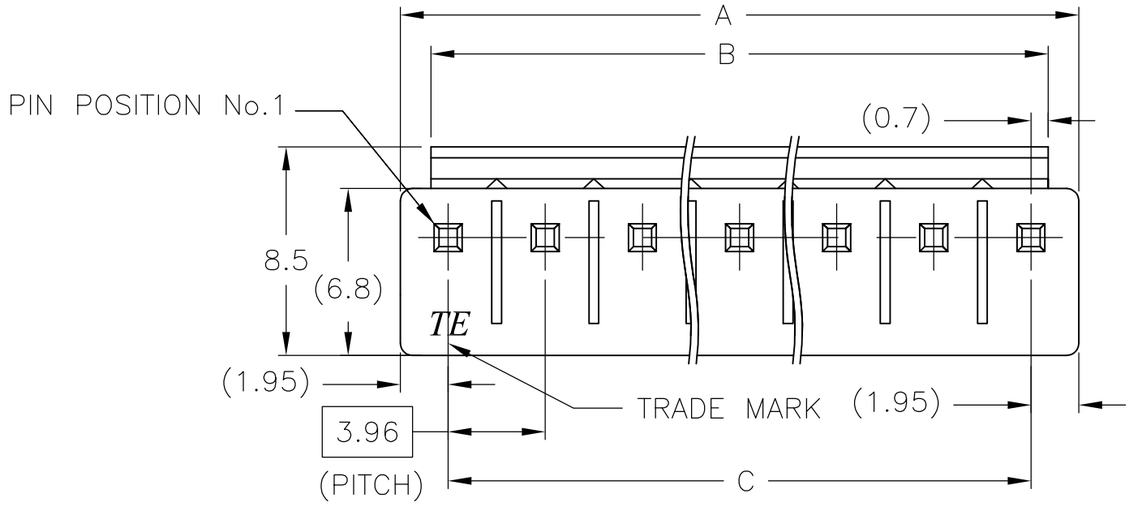

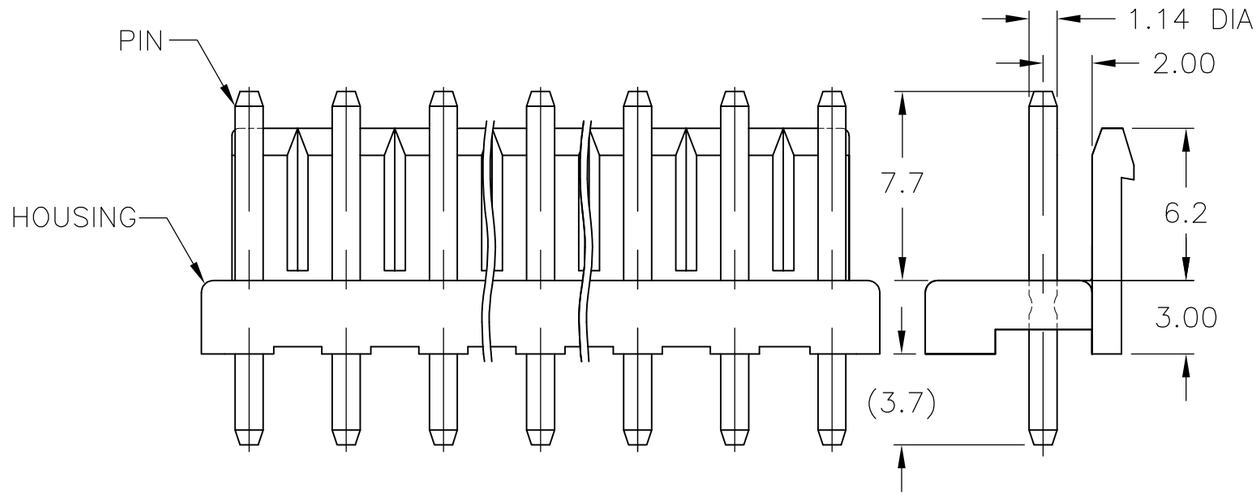

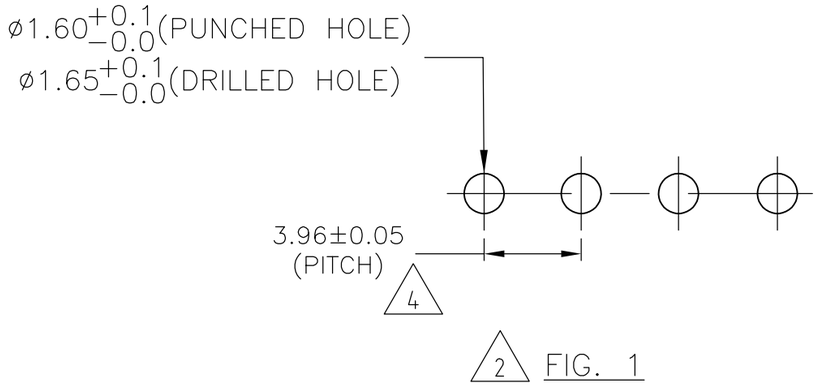

2 FIG. 1

1 MATING CONN P/N: □-1123722-□

2 APPLICABLE P.C.B LAYOUT: SEE FIG. 1

3 APPLICABLE P.C.B THICKNESS: 1.60

4 SKETCHES SHOW NO CONTACTS MISSING.

5 COMPLY WITH GLOW WIRE REQUIREMENTS FOR PARTS OF NON-METALIC MATERIAL SUPPORTING A CURRENT CARRYING CONNECTION DETAILED IN IEC 60335-1 SECTION 30 (GWT [GLOW WIRE TEST]) 750° SPEC.

6 PIN: MATERIAL: BRASS
FINISH: POST TIN

7 HOUSING: PBT, 30% GLASS, UL94-V0

8 HOUSING: NYLON, 15% GLASS, UL94-V2

9 O : WITH PIN
X : WITHOUT PIN

GWT 5	HOUSING MATERIAL	1	2	3	4	5	6	7	8	9	10	11	C	B	A	COLOR	POS	PART NUMBER
		PIN POSITION 9											DIMENSION					
YES	8	O	X	O	O	O	X	O	X	O	–	–	31.68	33.08	35.58	NATURAL	9	7-1565037-6
NO	7	O	X	O	O	O	X	O	X	O	–	–	31.68	33.08	35.58	NATURAL	9	1-1565037-6

THIS DRAWING IS A CONTROLLED DOCUMENT.

DIMENSIONS: mm

TOLERANCES UNLESS OTHERWISE SPECIFIED:
0 PLC ± 0.5
1 PLC ± 0.5
2 PLC ± 0.30
3 PLC ±
4 PLC ±
ANGLES ±

MATERIAL –
FINISH –

DWN NAGALAKSHMI K 12JUN2014
CHK SEILHAMER, MALACHI 12JUN2014
APVD SEILHAMER, MALACHI 12JUN2014
PRODUCT SPEC 108-5609
APPLICATION SPEC –
WEIGHT –

TE Connectivity

NAME ECONOMY POWER (EP) CONN HEADER ASSY 3.96MM PITCH 9 POS SPECIAL

SIZE	CAGE CODE	DRAWING NO	RESTRICTED TO
A3	MS	C-1565037	–

CUSTOMER DRAWING | SCALE – | SHEET 1 OF 1 | REV D