THIS DRAWING IS UNPUBLISHED. RELEASED FOR PUBLICATION -
© COPYRIGHT - ALL RIGHTS RESERVED.

LOC	DIST
ES	00

REVISIONS

P	LTR	DESCRIPTION	DATE	DWN	APVD
	B2	REVISED AS PER ECR-24-230558	23DEC2024	MK	JM

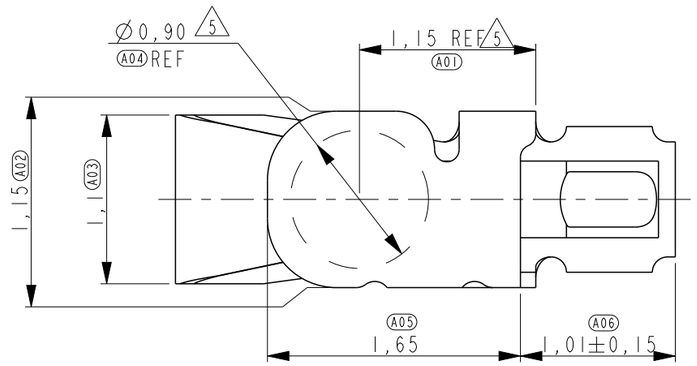

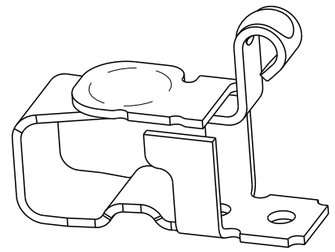

SCALE 15:1

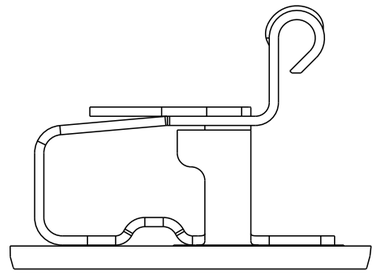

SCALE 15:1
REFERENCE VIEW FOR
COMPONENT PLACEMENT

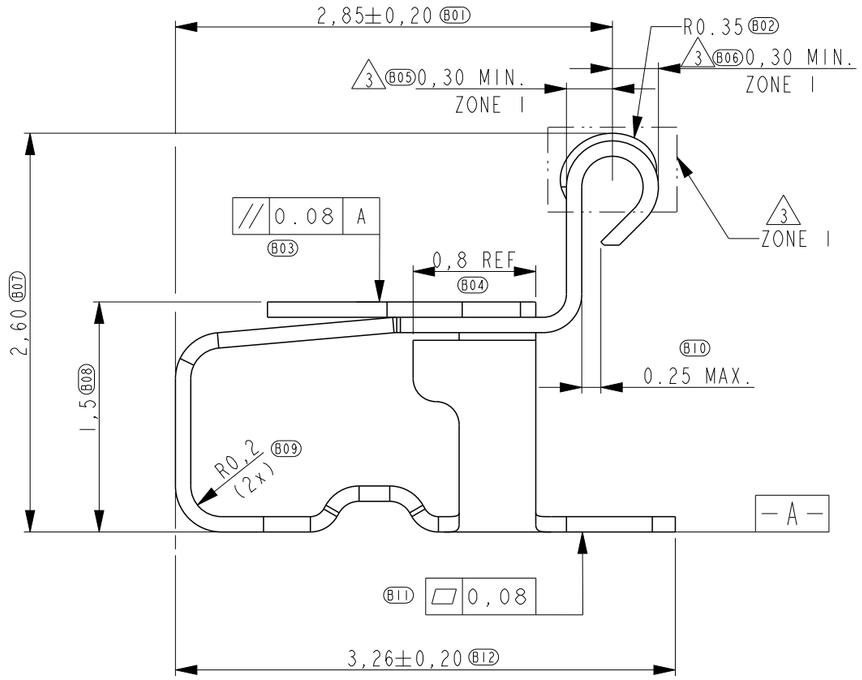

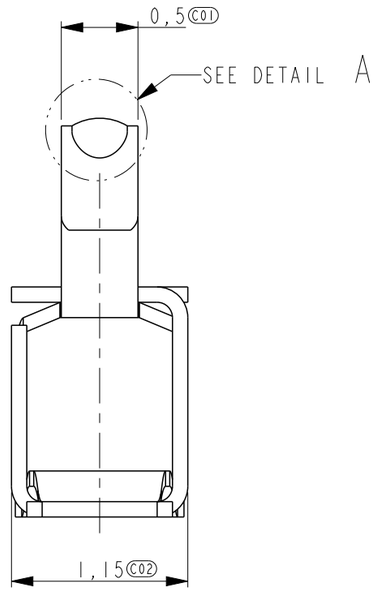

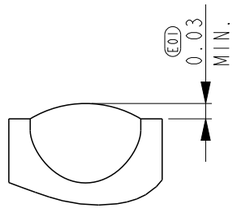

DETAIL A
SCALE 50:1

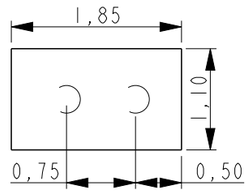

SCALE 15:1

RECOMMENDED PWB LAY-OUT (±0.05)
DASHED CIRCLES ARE THE LOCATION
OF THE SPRING FINGER BOTTOM HOLES

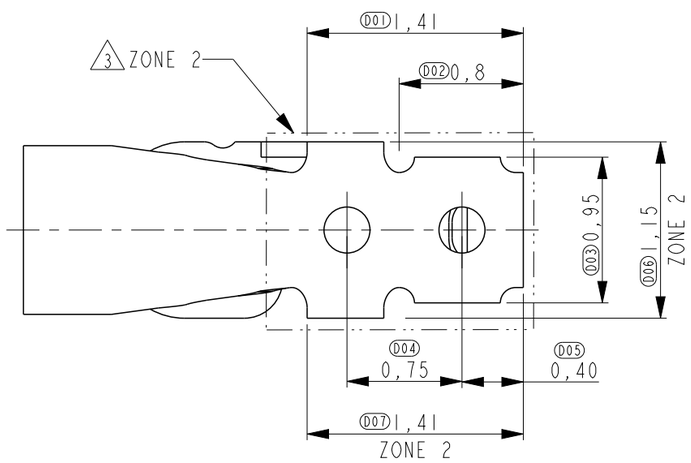

1 PART NUMBER: 1551574-5 AS SHOWN.

2 MATERIAL: STAINLESS STEEL.

3 PLATING: 1,3um MIN. NICKEL UNDERLAYER ALL OVER
ZONE 1: 0,30um MIN. GOLD
ZONE 2: 0.05-0.20um GOLD FLASH

4 NORMAL FORCE 0.6±0.2N AT NORMINAL HEIGHT 2.0MM.

5 INDICATED SURFACE TO BE USED AS PICK AND PLACE SURFACE.

THIS DRAWING IS A CONTROLLED DOCUMENT.

DIMENSIONS: mm

TOLERANCES UNLESS OTHERWISE SPECIFIED:

0 PLC	±0.2
1 PLC	±0.1
2 PLC	±0.1
3 PLC	±0.05
4 PLC	±-
ANGLES	±5°

MATERIAL - 2

FINISH - 3

DWN	22-JUN-2010 Tony Zhang
CHK	22-JUN-2010 Harada Yohei
APVD	22-JUN-2010 Steven Yao
PRODUCT SPEC	108-115008
APPLICATION SPEC	-
WEIGHT	0.0078g

TE Connectivity

NAME: SPRING FINGER H=2.60mm -

SIZE	CAGE CODE	DRAWING NO	RESTRICTED TO
A3		C-1551574	-

CUSTOMER DRAWING | SCALE 25:1 | SHEET 1 OF 2 | REV B2

1470-19 (3/11)

THIS DRAWING IS UNPUBLISHED. RELEASED FOR PUBLICATION -
© COPYRIGHT - ALL RIGHTS RESERVED.

LOC	DIST
ES	-

REVISIONS

P	LTR	DESCRIPTION	DATE	DWN	APVD
	-	SEE SHEET 1	-	-	-

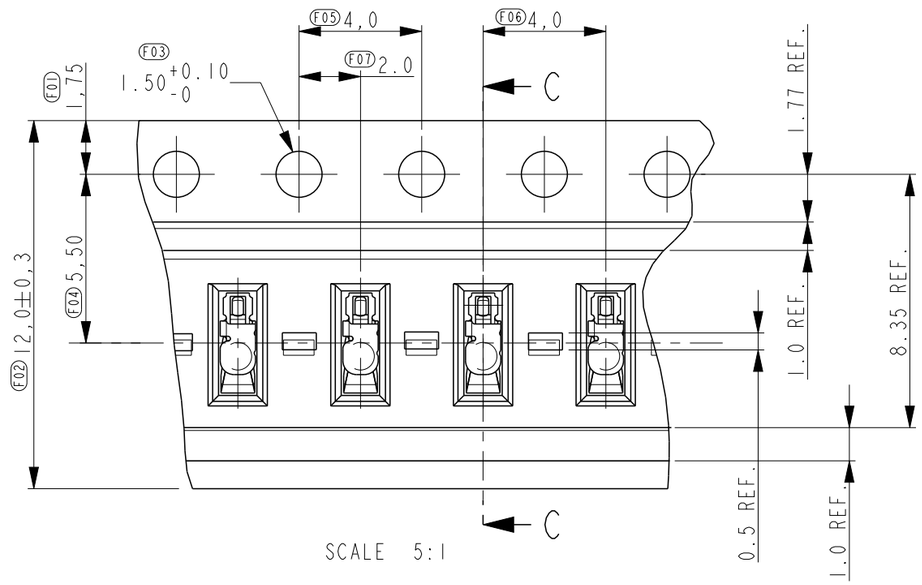

SCALE 5:1

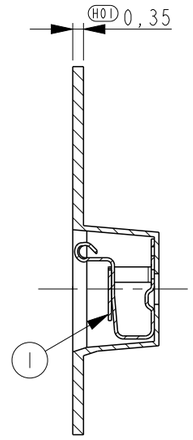

SECTION C-C

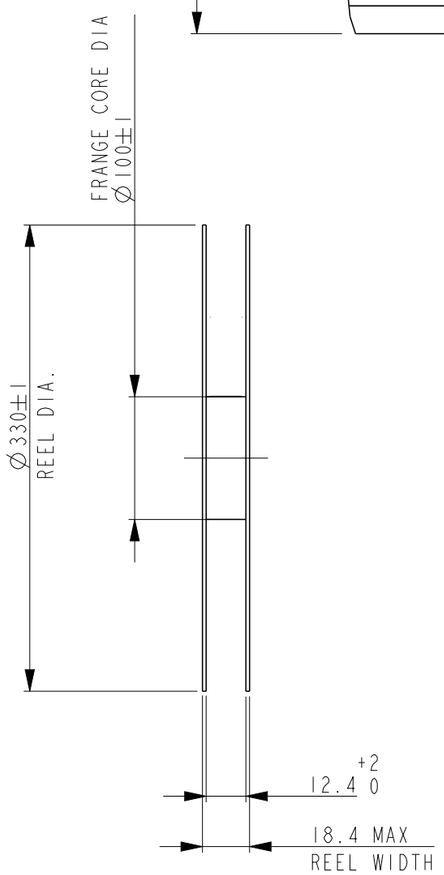

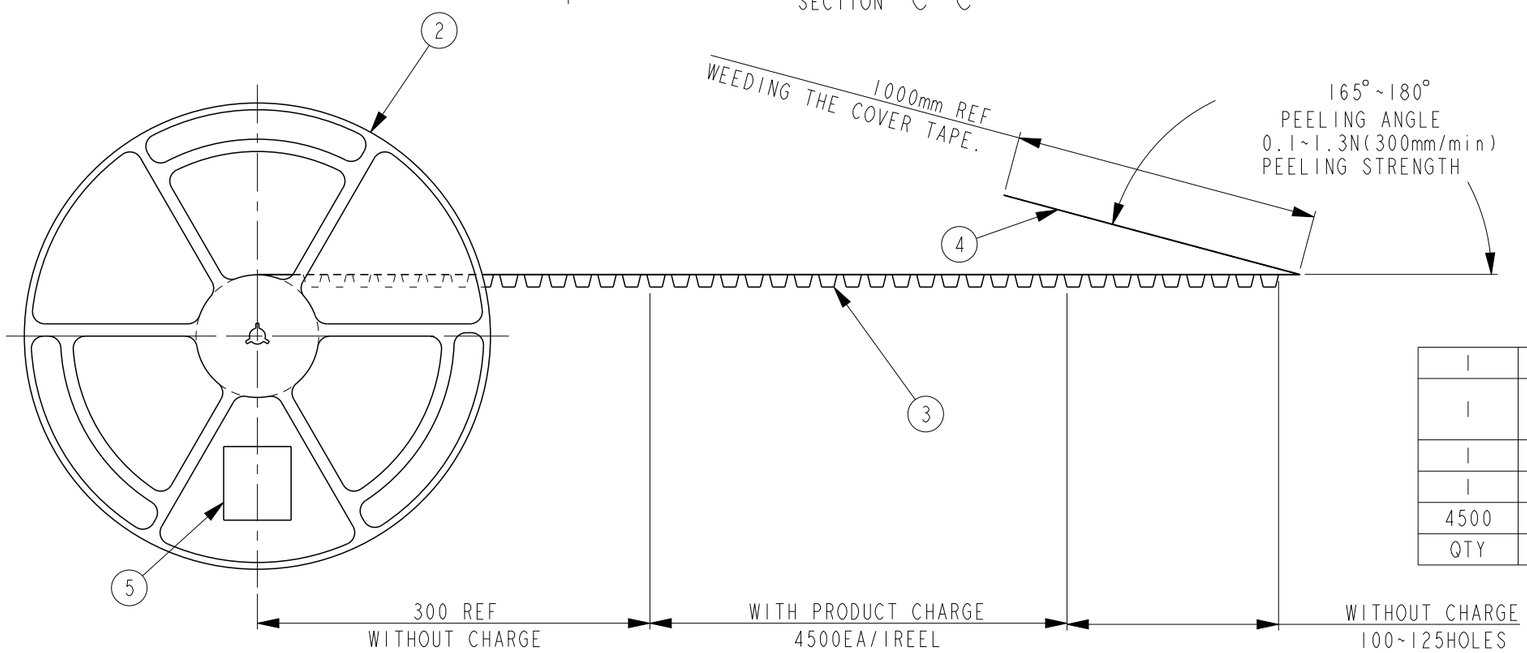

QTY	DESCRIPTION	ITEM
1	LABEL	5
1	COVER TAPE (HEAT SEALING)	4
1	EMBOSS	3
1	PLASTIC REEL	2
4500	SPRING FINGER	1

THIS DRAWING IS A CONTROLLED DOCUMENT.

DIMENSIONS: mm

TOLERANCES UNLESS OTHERWISE SPECIFIED:

0 PLC	±0.2
1 PLC	±0.1
2 PLC	±0.1
3 PLC	±0.05
4 PLC	±-
ANGLES	±5°

MATERIAL -

FINISH -

DWN
CHK
APVD
PRODUCT SPEC
APPLICATION SPEC
WEIGHT

CUSTOMER DRAWING

TE Connectivity

NAME SPRING FINGER H=2.60mm -

SIZE	CAGE CODE	DRAWING NO	RESTRICTED TO
A3		C-1551574	-

SCALE 5:1 SHEET 2 OF 2 REV B2