THIS DRAWING IS UNPUBLISHED. RELEASED FOR PUBLICATION 20
© COPYRIGHT 20 BY TYCO ELECTRONICS CORPORATION. ALL RIGHTS RESERVED.

LOC	DIST
H	-

REVISIONS

P	LTR	DESCRIPTION	DATE	DWN	APVD
	1	FIRST ISSUE	10DEC2008	JV	RL

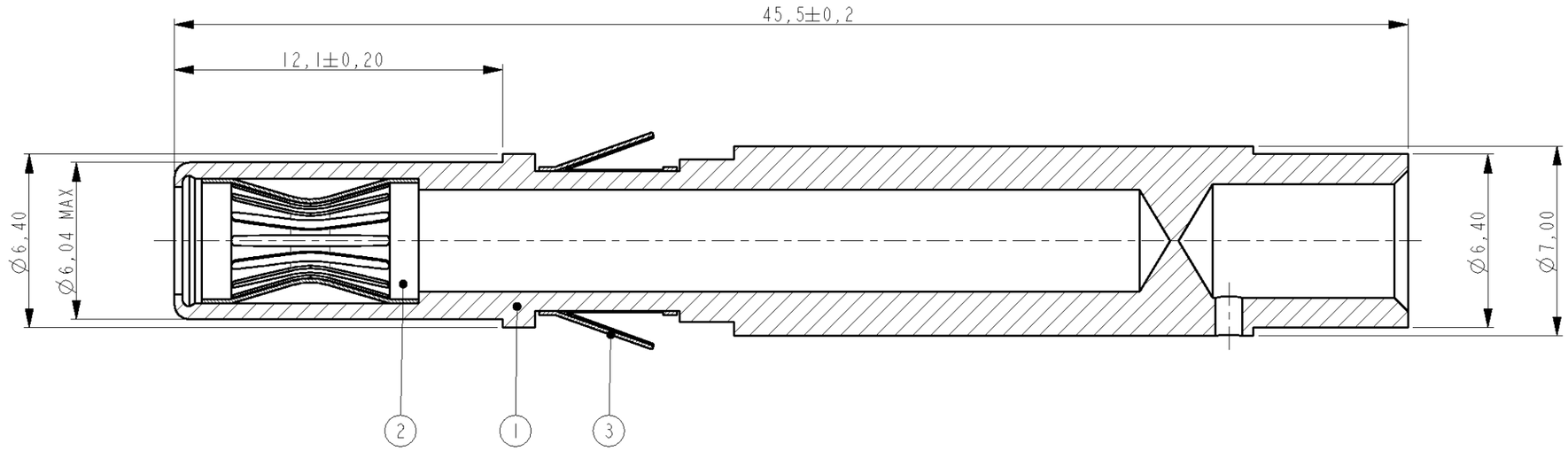

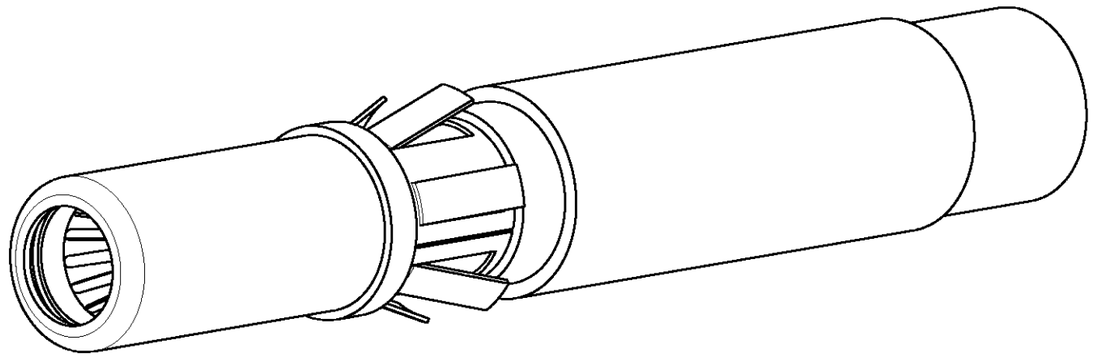

1551017-1 AS SHOWN

ITEM NO.	DESCRIPTION	QUANT.
3	RETAINING SPRING	1
2	CONTACT BAND, LAIV, FEMALE	1
1	CONTACT, SOCKET BODY	1

PRELIMINARY PART
NOT RELEASED FOR PRODUCTION

THIS PRODUCT HAS NOT COMPLETED VALIDATION TESTING

THIS DRAWING IS A CONTROLLED DOCUMENT FOR TYCO ELECTRONICS CORPORATION. IT IS SUBJECT TO CHANGE AND THE CONTROLLING ENGINEERING ORGANIZATION SHOULD BE CONTACTED FOR THE LATEST REVISION.

DIMENSIONS: mm

TOLERANCES UNLESS OTHERWISE SPECIFIED:

0 PLC	±0,2
1 PLC	±0,1
2 PLC	±0,05
3 PLC	±0,025
4 PLC	±0,005
ANGLES	±3°

MATERIAL -

FINISH -

DWN J.VOS 10-Dec-08
CHK R.LOKKER 10-Dec-08
APVD R.VD.SANDT -
PRODUCT SPEC -
APPLICATION SPEC -
WEIGHT -

CUSTOMER DRAWING

Tyco Electronics

Tyco Electronics Corporation
's-Hertogenbosch, Nederland

NAME
CONTACT, SOCKET ASSY, TYPE 1, SIZE 8
WIRE SIZE 6MM2
-

SIZE	CAGE CODE	DRAWING NO	RESTRICTED TO
A3	00779	C-1551017	-

SCALE 5:1 SHEET 1 OF 1 REV 1

AMP 1470-19 REV 31MAR2000