THIS DRAWING IS UNPUBLISHED. RELEASED FOR PUBLICATION 2006
DIFFUSION RESTREINTE LIBRE A LA DIFFUSION
© COPYRIGHT 2006 BY TYCO ELECTRONICS CORPORATION. ALL RIGHTS RESERVED. TOUS DROITS RESERVES.

LOC	DIST
F	00

REVISIONS

P	LTR REV	DESCRIPTION MODIFICATIONS	DATE	DWN DESS.	APVD APP.
	G	ISO DIMENSIONNING AND DRAWING UPDATE	15DEC2006	FSt	JDr
	H	GENE2 1WAY HOUSING ADDED	18DEC2009	FSt	JDr

COUPE B-B
SECTION B-B

LOGEMENT DU JOINT INTERFACIAL : MARQUES, BAVURES OU PLAN DE JOINT INTERDITS

HOUSING OF CIRCUMFERENTIAL SEAL : MARKS , BURRS OR JUNCTION LINES FORBIDEN

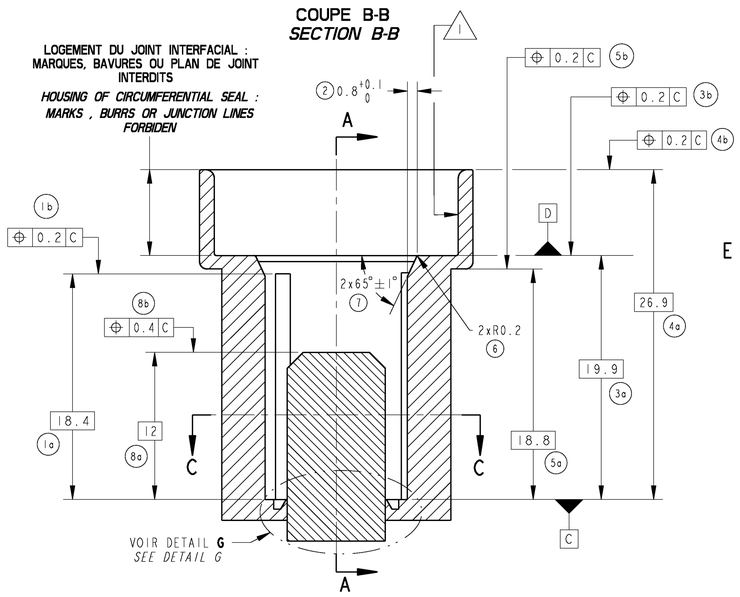

COUPE A-A
SECTION A-A

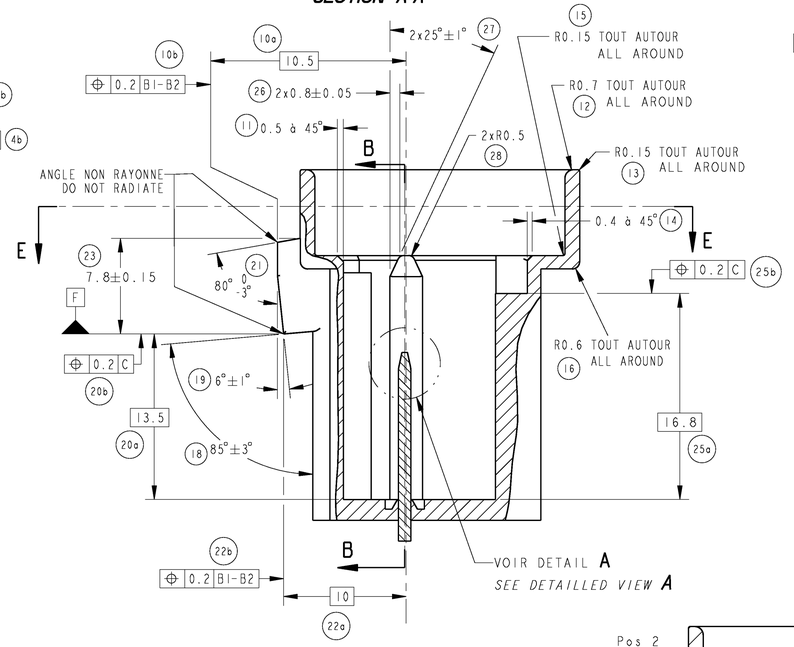

DETAIL / *DETAIL* A
ECHELLE / *SCALE* 16:1

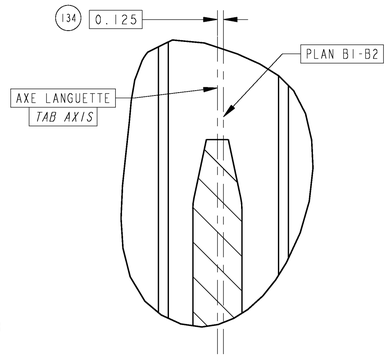

DETAIL / *DETAIL* D
ECHELLE / *SCALE* 8:1

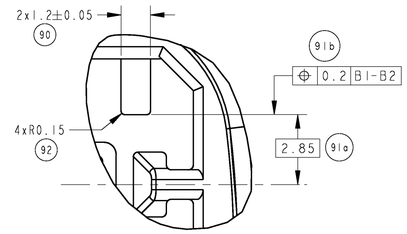

DETAIL / *DETAIL* G
ECHELLE / *SCALE* 3:1

FORME ACCEPTEE - POUR INFORMATION
ACCEPTED DESIGN - FOR INFORMATION

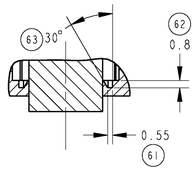

COUPE E-E
SECTION E-E

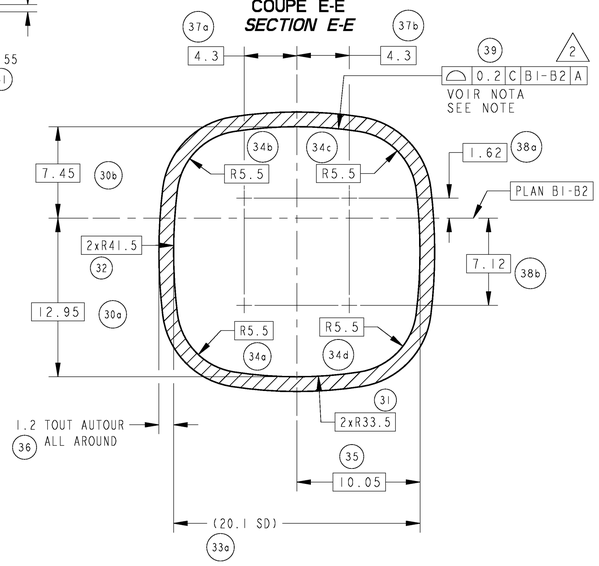

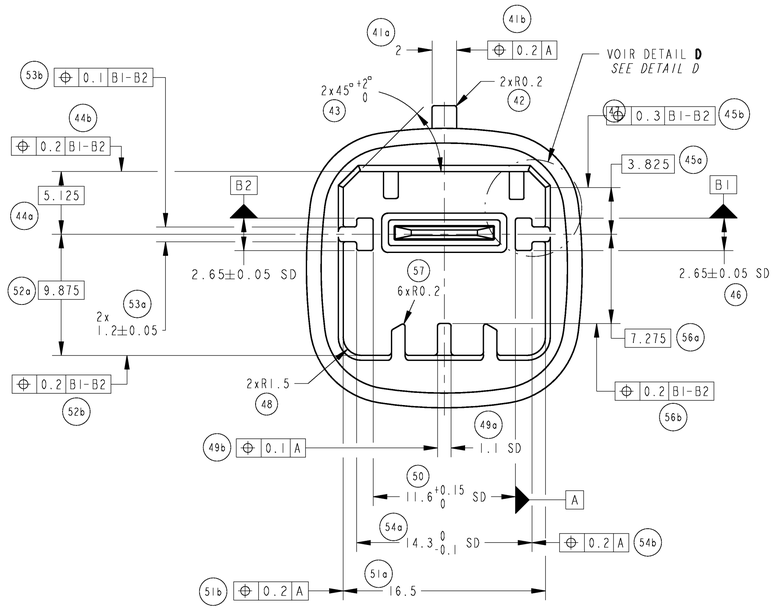

COUPE C-C
SECTION C-C

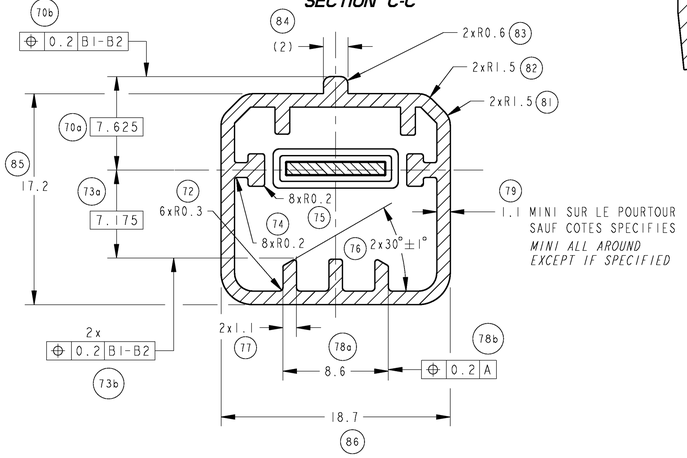

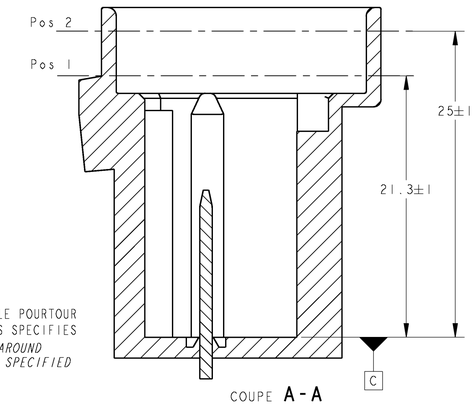

COUPE **A-A**

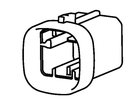

ECHELLE / *SCALE* 1:1

NOTA :

- MATIERE PRECONISEE: PBT 10% OU 20% FV
- DEPOUILLES: 1.5° SAUF SPECIFICATIONS CONTRAIRES
- LES DEFORMATIONS DE LA PIECE DOIVENT ETRE COMPRISES DANS LES TOLERANCES
- ( ): COTE POUR INORMATION
- SD : SANS DEPOUILLE OU DEPOUILLE COMPRISE DANS LA TOLERANCE
- (1) SURFACE A POLIR (Ra 0.4 SUR MOULE)
- (2) CONTROLE DE LA FORME: 18 POINTS DE MESURE A PRENDRE SUR LE CONTOUR DE LA ZONE D'ETANCHEITE AUX POSITIONS 'Pos 1' et 'Pos 2'

NOTE :

- *RECOMMENDED MATERIAL: PBT 10% OR 20% GF*
- *DRAFTS: 1.5° UNLESS OTHERWISE SPECIFIED*
- *PART'S DEFORMATIONS MUST BE INCLUDED IN THE TOLERANCES*
- *( ): DIMENSION FOR INFORMATION*
- *SD : WITHOUT DRAFT OR DRAFT INCLUDED IN THE TOLERANCES*
- (1) *AREA TO BE POLISHED (Ra 0.4 ON THE MOLD)*
- (2) *SHAPE CHECKING: 18 MEASUREMENT POINTS TO BE TAKEN ALL AROUND THE SEALING AREA AT 'Pos 1' AND 'Pos 2' LOCATION*

LA COTATION EST EFFECTUEE SUIVANT L'EXIGENCE D'ENVELOPPE
DIMENSIONING IS PERFORMED ACCORDING TO SURROUNDING REQUIREMENT
ISO 8015:1985 (NF E 04-561 OCT.1991)

ISO 1101 (NF E 04-552)
ISO 2692:1988 (NF E 04-555 FEV.1992)
ISO 5459 (NF E 04-554 DEC.1988)
ISO 5458:1987 (NF E 04-559 FEV.1991)
ISO 10578 (NF E 04-558 AOUT 1983)
ISO 10579 (NF E 04-565 OCT.1986)
ISO 3040:1990 PARTIELLE (NF E 04-557 DEC.1991)

POSITIONNEMENT DE LA LANGUETTE
TAB POSITIONING

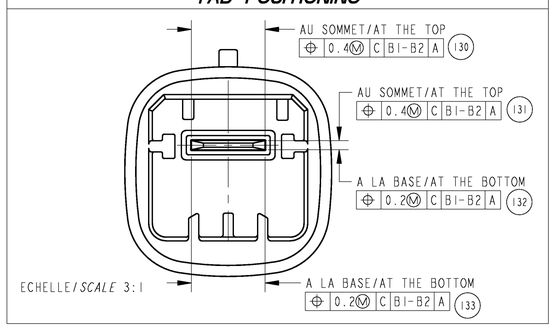

ECHELLE/*SCALE* 3:1

CODAGES ET COULEURS ASSOCIEES
CODING AND ASSOCIATED COLORS

NOIR / *BLACK*	BLEU / *BLUE*	GRIS / *GREY*
1544642-1	1544642-2	1544642-3

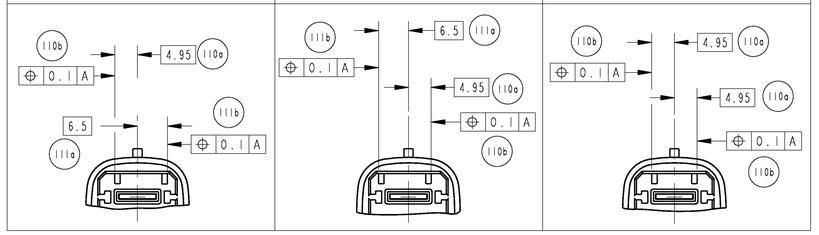

THIS DRAWING IS CONTROLLED DOCUMENT FOR TYCO ELECTRONICS CORPORATION IT IS SUBJECT TO CHANGE AND THE CUSTOMER OR ORGANIZATION SHOULD BE CONTACTED FOR THE LATEST REVISION. CE PLAN EST UN DOCUMENT CONTROLE PAR TYCO ELECTRONICS. IL EST SUSCEPTIBLE D'ETRE REVISE, CONTACTER LE SERVICE TECHNIQUE DE TYCO ELECTRONICS POUR OBTENIR LA DERNIERE REVISION.	DIMENSIONS: mm	TOLERANCES UNLESS OTHERWISE SPECIFIED: TOLERANCES NON SPECIFIEES (SUIV NB. DE DECIMALES): 0 PLC/DEC: ±0.1 1 PLC/DEC: ±0.1 2 PLC/DEC: ±0.1 3 PLC/DEC: ±0.1 4 PLC/DEC: ±0.1 ANGLES: ±2°	FINISH/FINITION - -
MATERIAL/MATIERE VOIR NOTA SEE NOTE			

DWN /DESSINE	10JAN2003	T.GUIMIER
CHK /VERIFIE	10JAN2003	F.FLORES
APVD /APPROUVE	10JAN2003	J.DAHER
PRODUCT SPEC SPEC. PRODUIT		108-15282
APPLICATION SPEC SPEC. APPLICATION		411-15664
WEIGHT MASSE APPROX.		-

Tyco Electronics — TYCO ELECTRONICS FRANCE SAS, RN 90, 38530 CHAPAREILLAN

NAME / TITRE: EMBASE 1 VOIE 8mm NGI ETANCHE
1 WAY 8mm NGI SEALED HEADER

SIZE FORMAT	CAGE CODE	DRAWING NO No. PLAN	RESTRICTED TO RESERVE A
A1	00779	C-1544642	-

CUSTOMER DRAWING /PLAN CLIENT — UNIQUEMENT POUR REFERENCE — SCALE ECHELLE 4:1 — SHEET FEUILLE 1 OF DE 2 — REV H

THIS DRAWING IS UNPUBLISHED. RELEASED FOR PUBLICATION 2006
DIFFUSION RESTREINTE LIBRE A LA DIFFUSION
© COPYRIGHT 2006 BY TYCO ELECTRONICS CORPORATION. ALL RIGHTS RESERVED. TOUS DROITS RESERVES.

LOC	DIST
F	00

REVISIONS

P	LTR REV	DESCRIPTION MODIFICATIONS	DATE	DWN DESS.	APVD APP.
	-	SEE SHEET 1	-	-	-

REF BOITIER
HOUSING PN

- 1544680-*
- 1801361-*
- 1801437-*
- 1544998-*

ZONE A LAISSER LIBRE AUTOUR DE L'EMBASE AVANT ET APRES ACCOUPLEMENT
AREA TO BE FREE AROUND THE HEADER BEFORE AND AFTER ASSEMBLY

POUR DEMONTAGE / *FOR DISASSEMBLING*

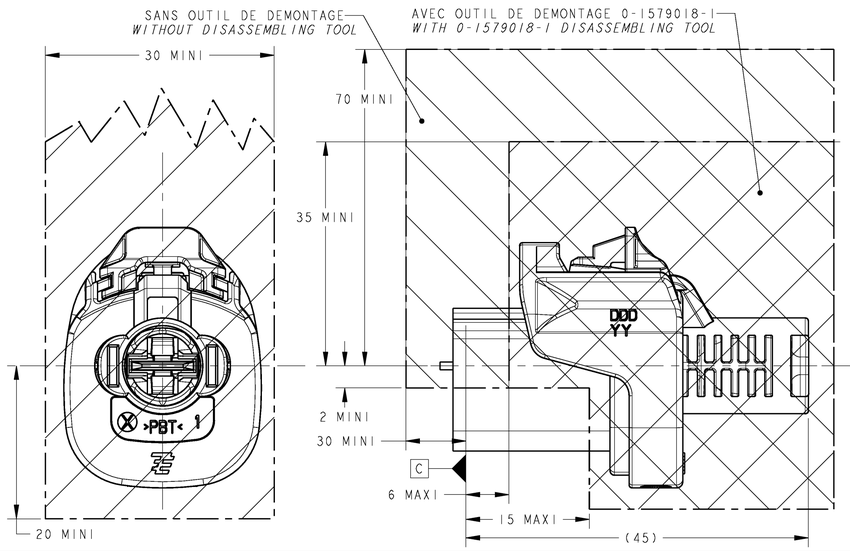

POUR MONTAGE / *FOR ASSEMBLING*

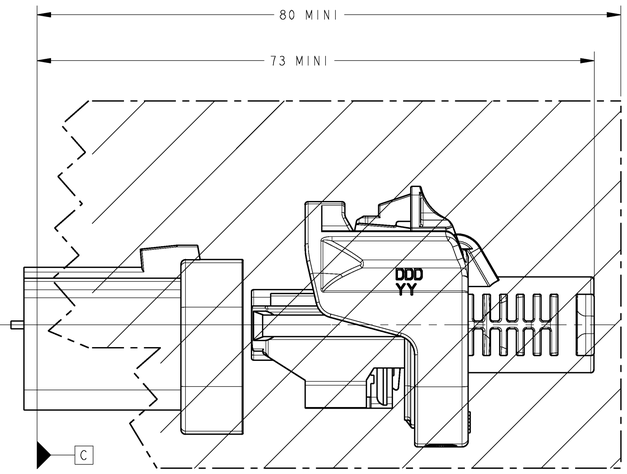

- 1544603-*
- 1544601-*

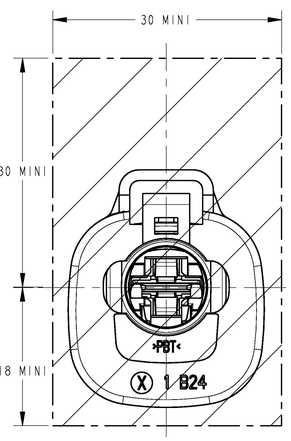

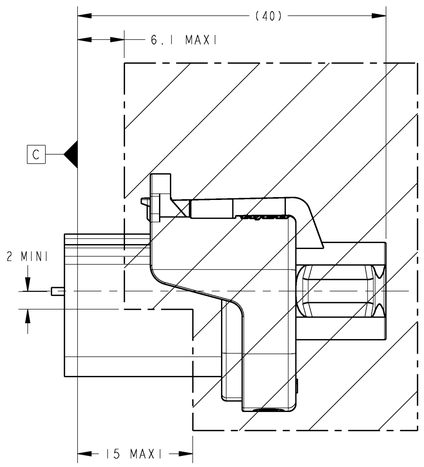

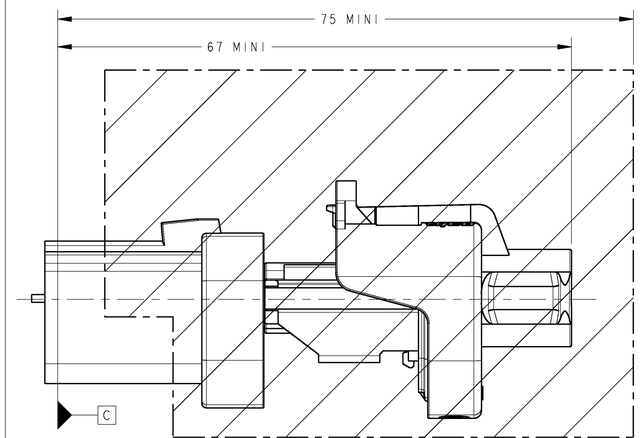

PORTE CLIP 1544998-* ET 1801361* (SANS CPA)
1544998- AND 1801361-* RECEPTACLE HOUSING (WITHOUT CPA)*

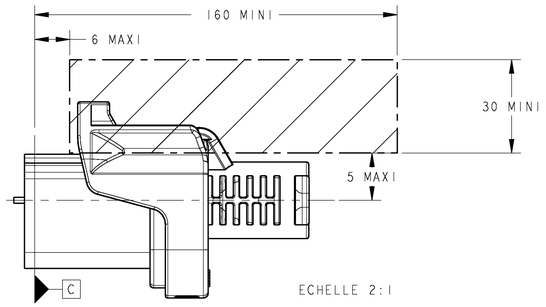

ZONE A LAISSER LIBRE POUR DECONNEXION
AVEC UN TOURNEVIS
AREA TO BE FREE FOR DISCONNECTION
WITH A SCREW DRIVER

PORTE CLIP 1544601-* et 1544603-*
1544601- AND 1544603-* RECEPTACLE HOUSING*

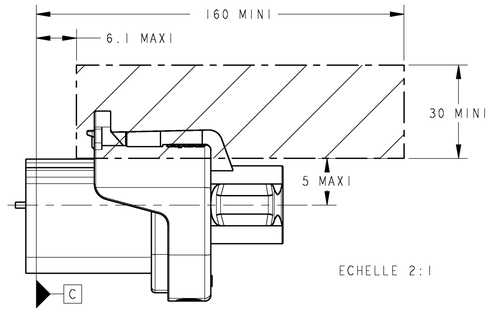

ZONE A LAISSER LIBRE POUR DECONNEXION
AVEC UN TOURNEVIS
AREA TO BE FREE FOR DISCONNECTION
WITH A SCREW DRIVER

ENTRAXES ENTRE EMBASES JUXTAPOSEES
DISTANCES BETWEEN AXIS OF JUXTAPOSED HEADERS

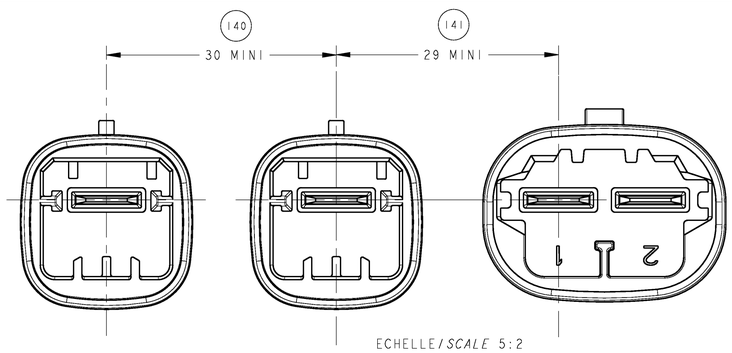

ECHELLE/*SCALE* 5:2

DETAIL / DIMENSION
DETAIL / DIMENSION

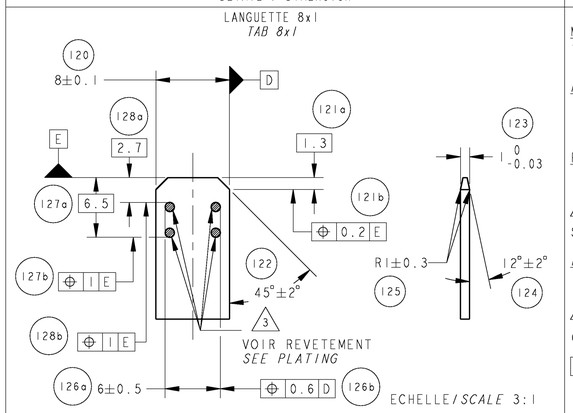

ECHELLE/*SCALE* 3:1

MATIERE / REVETEMENT
MATERIAL / PLATING

MATIERE:
- CONDUCTIVITE ELECTRIQUE PRECONISEE >60% IACS

MATERIAL:
- *RECOMMENDED ELECTRIC CONDUCTIVITY >60% IACS*

REVETEMENT: ETAMAGE

3 :4 POINTS DE MESURE SUR LES 2 FACES

PLATING: TIN PLATED

3 *:4 MEASUREMENT POINTS ON BOTH FACES*

Ni 0.5-1µm | Sn 0.8-3µm

129

TENUE MECANIQUE
MECHANICAL RESISTANCE

Fh = 200N (<=>) Ft = 40N Fl = 100N (<=>): TRACTION / COMPRESSION	*Fh = 200N (<=>)* *Ft = 40N* *Fl = 100N* *(<=>): TENSION / COMPRESSION*

LES FORCES DOIVENT ETRE APPLIQUEES AU MILIEU DE L'ARETE OU DE LA FACE DESIGNEE
THE FORCES MUST BE APPLIED AT THE MIDDLE OF THE EDGE OR THE SURFACE AS SHOWN

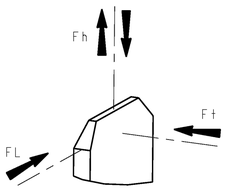

ECHELLE 6:1

COMPOSANTS ASSOCIES
ASSOCIATED COMPONENTS

COMPOSANTS *COMPONENTS*	REF TE *PN TE*	MATIERE *MATERIAL*
PORTE-CLIP 1 VOIE 8mm NGI ETANCHE *1-WAY 8mm NGI SEALED RECEPTACLE HOUSING*	1544603-*	PBT HB
PORTE-CLIP 1 VOIE 8mm NGI *1-WAY 8mm NGI RECEPTACLE HOUSING*	1544601-*	PBT HB
PORTE-CLIP 1 VOIE 8mm NGI GENE2 ETANCHE AVEC CPA *1-WAY 8mm NGI SEALED RECEPTACLE HOUSING GENE2 WITH CPA*	1544680-*	PBT HB
/PORTE-CLIP 1 VOIE 8mm NGI GENE2 ETANCHE *1-WAY 8mm NGI SEALED RECEPTACLE HOUSING GENE2*	1801361-*	PBT HB
PORTE-CLIP 1 VOIE 8mm NGI GENE2 AVEC CPA *1-WAY 8mm NGI RECEPTACLE HOUSING GENE2 WITH CPA*	1801347-*	PBT HB
PORTE-CLIP 1 VOIE 8mm NGI GENE2 *1-WAY 8mm NGI RECEPTACLE HOUSING GENE2*	1544998-*	PBT HB

THIS DRAWING IS A CONFIDENTIAL DOCUMENT PER TYCO ELECTRONICS CORPORATION. IT IS SUBJECT TO CHANGE AND DOCUMENTS MUST BE CONSULTED. ORGANIZATION SHOULD BE CONTACTED FOR THE LATEST REVISION.
CE PLAN EST UN DOCUMENT CONTROLE PAR TYCO ELECTRONICS. IL EST SUSCEPTIBLE D'ETRE REVISE. CONTACTER LE BUREAU TECHNIQUE DE TYCO ELECTRONICS POUR OBTENIR LA DERNIERE REVISION.

DIMENSIONS: mm

TOLERANCES UNLESS OTHERWISE SPECIFIED:
TOLERANCES NON SPECIFIEES
(SUIVI NB DE DECIMALES):
0 PLC /DEC: ±0.1
1 PLC /DEC: ±0.1
2 PLC /DEC: ±0.1
3 PLC /DEC: ±0.1
4 PLC /DEC: ±0.1
ANGLES: ±2°

MATERIAL /MATIERE: VOIR NOTA SEE NOTE

FINISH /FINITION: - - -

DWN /DESSINE	T.GUIMIER	10JAN2003
CHK /VERIFIE	F.FLORES	10JAN2003
APVD /APPROUVE	J.DAHER	10JAN2003
PRODUCT SPEC SPEC. PRODUIT	108-15282	
APPLICATION SPEC SPEC. APPLICATION	411-15664	
WEIGHT MASSE APPROX.	-	

Tyco Electronics — TYCO ELECTRONICS FRANCE SAS, RN 90, 38530 CHAPAREILLAN

NAME / TITRE: EMBASE 1 VOIE 8mm NGI ETANCHE
1 WAY 8mm NGI SEALED HEADER
-

SIZE FORMAT	CAGE CODE	DRAWING NO No. PLAN	RESTRICTED TO RESERVE A
A1	00779	C-1544642	-

CUSTOMER DRAWING / PLAN CLIENT — UNIQUEMENT POUR REFERENCE — SCALE ECHELLE 4:1 — SHEET FEUILLE 2 OF DE 2 — REV H