THIS DRAWING IS UNPUBLISHED. RELEASED FOR PUBLICATION 2011
© COPYRIGHT 2011 TE CONNECTIVITY ALL RIGHTS RESERVED.

LOC	DIST
B	-

REVISIONS

P	LTR	DESCRIPTION	DATE	DWN	APVD
	D	ECR-11-018847	13/09/11	JB	MG
	E	ECR-11-019621	11/10/11	JB	MG
	F	ECR-12-016823	25/09/12	JB	MG

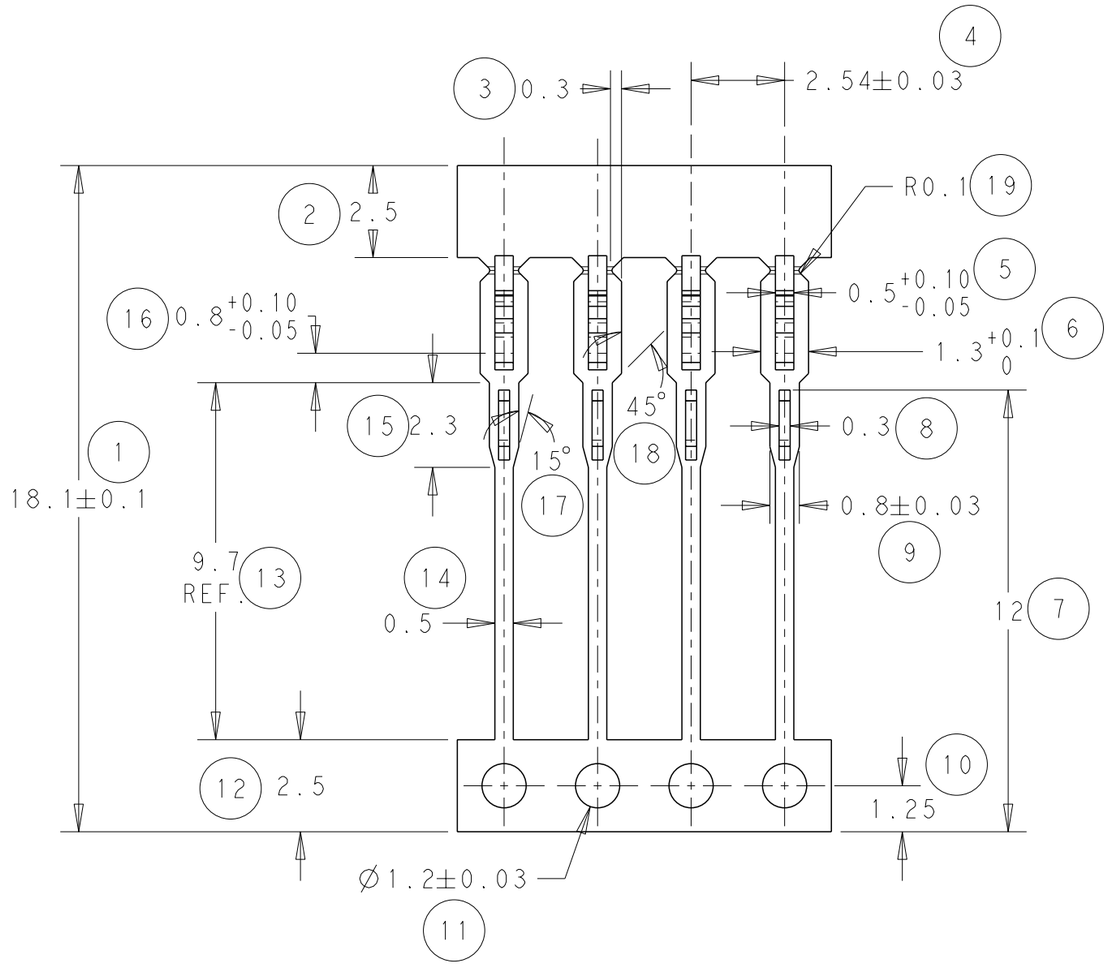

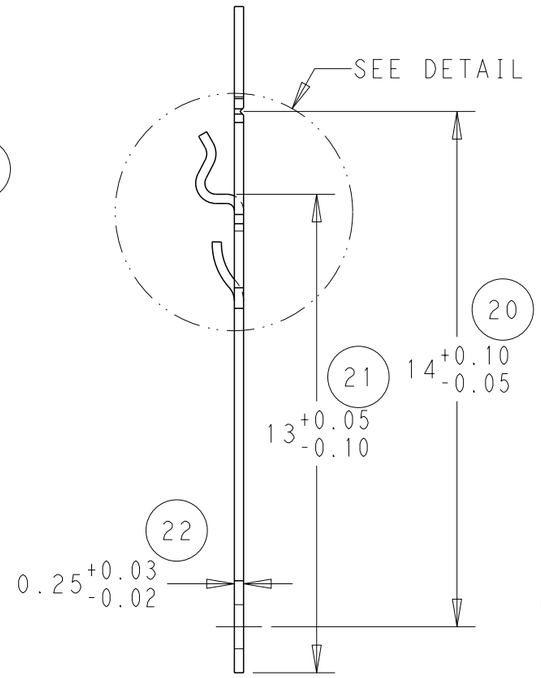

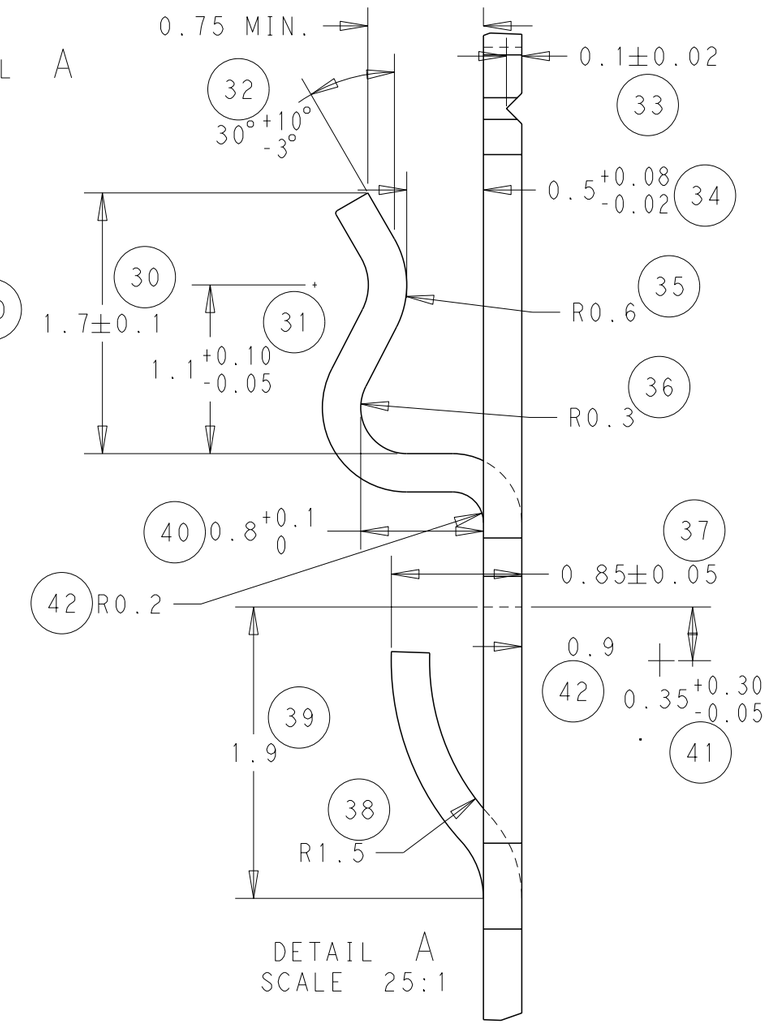

DETAIL A
SCALE 25:1

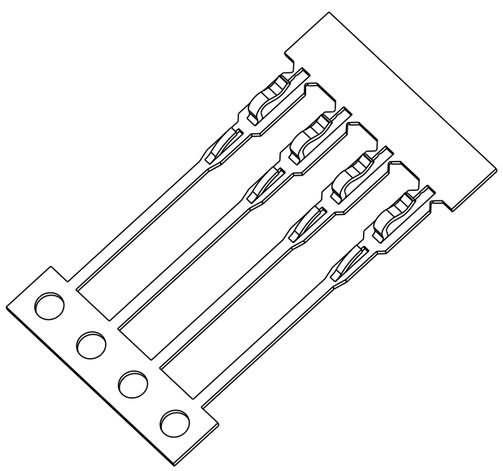

SCALE 4:1

NOTE
BOWING: AFTER UPPER TIE BAR REMOVAL- 1.5mm MAX. FOR 500mm

PITCH: AFTER UPPER TIE BAR REMOVAL- 2.54±0.127

0	Sn	1544281-1
REELING	FINISH	PART NUMBER

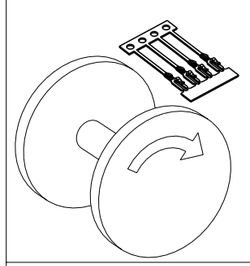

DIRECTION "0"
CONTACTS DOWN

DIRECTION "1"
CONTACTS UPWARDS

DIRECTION OF TOP OF REEL | DIRECTION

THIS DRAWING IS A CONTROLLED DOCUMENT.

DIMENSIONS: mm

TOLERANCES UNLESS OTHERWISE SPECIFIED:
0 PLC ±-
1 PLC ±-
2 PLC ±0.05
3 PLC ±-
4 PLC ±-
ANGLES ±0.5

MATERIAL SEE ABOVE
FINISH -

DWN J.BRIGHT 22/08/11
CHK M.GREENER 22/08/11
APVD D.PENNINGTON 22/08/11
PRODUCT SPEC -
APPLICATION SPEC -
WEIGHT -

TE Connectivity

NAME SIL CONTACT
-
-

SIZE	CAGE CODE	DRAWING NO	RESTRICTED TO
A3	00779	C-1544281	-

CUSTOMER DRAWING | SCALE NTS | SHEET 1 OF 1 | REV F

1470-19 (3/11)