THIS DRAWING IS UNPUBLISHED. RELEASED FOR PUBLICATION 20
© COPYRIGHT 20 BY - ALL RIGHTS RESERVED.

REVISIONS					
P	LTR	DESCRIPTION	DATE	DWN	APVD
	E2	ECR-15-009282	29JUL2015	KG	DW
	F	ECR-19-008989	17JUN2019	TS	DW

1. DIMENSIONS ARE FOR REFERENCE ONLY.

2. DIMENSION IS TO CENTER OF PARALLEL SPLICE.

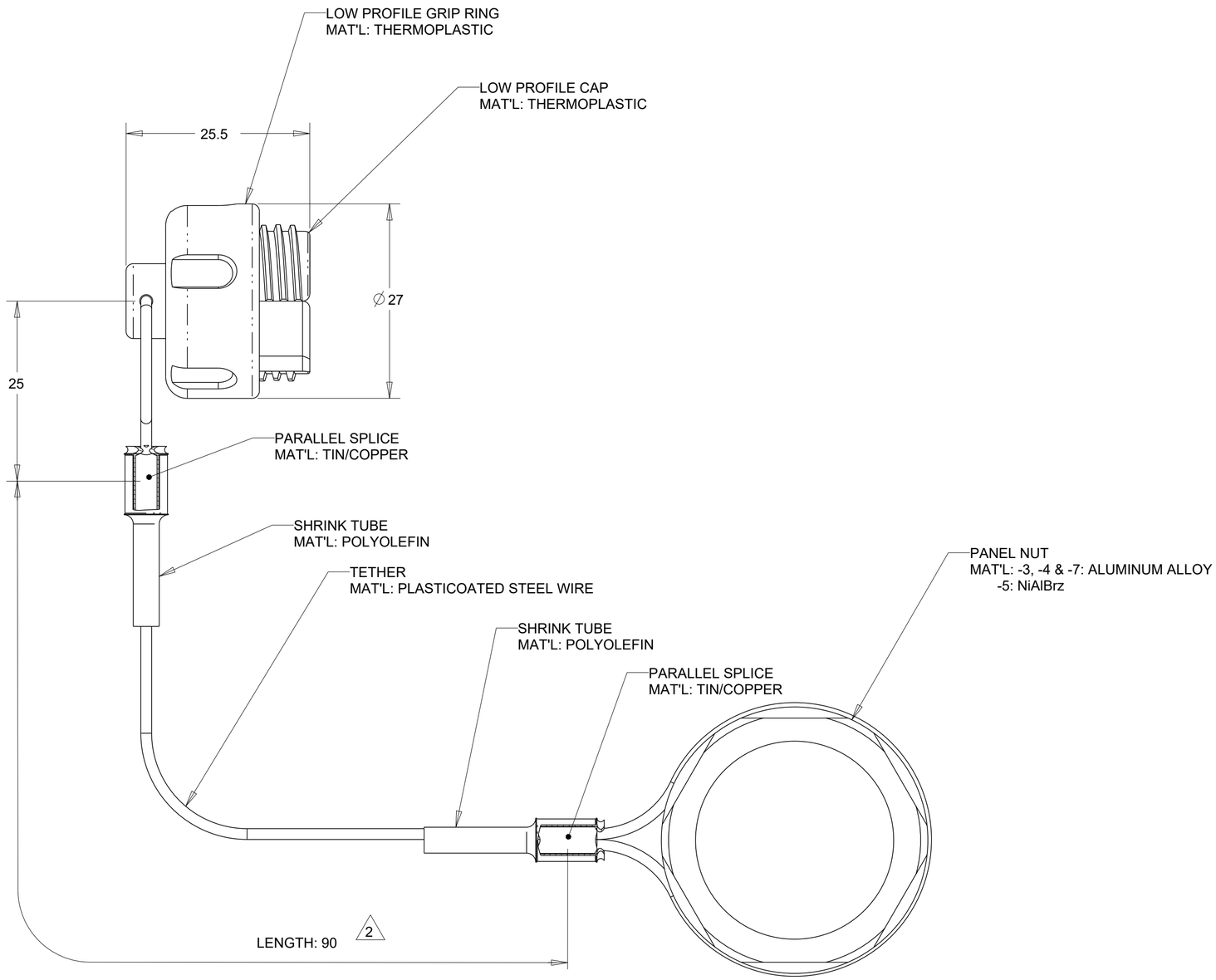

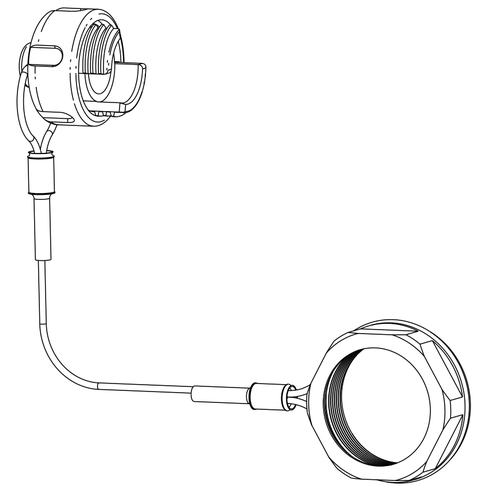

1515817-3, -4, -5 & -7

SCALE 1:1

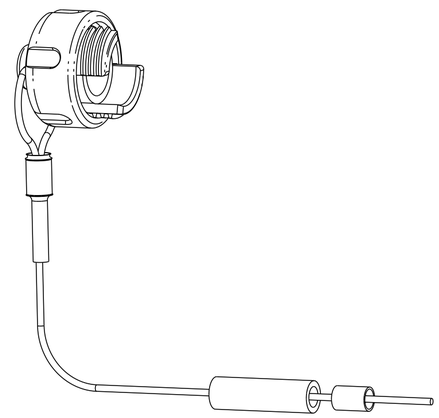

1515817-6

SCALE 1:1

PANEL NUT FINISH	PART NUMBER
BLACK Zn-Ni ALLOY	1515817-7
NO PANEL NUT	1515817-6
NONE	1515817-5
HARD ANODIZED	1515817-4
GREEN CHROMATE Zn	1515817-3

SUPERSEDED BY: 1515817-7

THIS DRAWING IS A CONTROLLED DOCUMENT.

DIMENSIONS: mm

TOLERANCES UNLESS OTHERWISE SPECIFIED:
0 PLC ±-
1 PLC ±-
2 PLC ±-
3 PLC ±-
4 PLC ±-
ANGLES ±-

MATERIAL: AS LISTED
FINISH: -

DWN 02APR2002 T. ALEXANDER
CHK 16OCT2002 D. WERTMAN
APVD 16OCT2002 D. WERTMAN
PRODUCT SPEC -
APPLICATION SPEC -
WEIGHT -

TE Connectivity

NAME: PROTECTIVE CAP, PRO BEAM JR., BULKHEAD, LOW PROFILE

SIZE A2 | CAGE CODE 00779 | DRAWING NO C-1515817 | RESTRICTED TO -

Customer Drawing | SCALE 2:1 | SHEET 1 OF 1 | REV F

1471-9 (3/13)