THIS DRAWING IS UNPUBLISHED. RELEASED FOR PUBLICATION ,19 .
© COPYRIGHT 19 BY AMP INCORPORATED. ALL RIGHTS RESERVED.

LOC	DIST
DF	XO

REVISIONS

P	LTR	DESCRIPTION	DATE	DWN	APVD
	0	RELEASED	10-01	CT	RG

COMPONENT	MATERIAL	FINISH
HOUSING	STAINLESS STEEL PER ASTM-A-484 OR ASTM-A-582 TYPE 303	PASSIVATED PER QQ-P-35
DIELECTRIC	PTFE FLUORCARBON PER ASTM-D-1457	–
CENTER CONTACT	BERYLLIUM COPPER PER ASTM-B-196 OR ASTM-B-197 ALLOY C17300, CONDITION H	GOLD PLATED PER ASTM-B-488
CONTACT SLEEVE	BERYLLIUM COPPER PER ASTM-B-196 OR ASTM-B-197 ALLOY C17300, CONDITION H	GOLD PLATED PER ASTM-B-488
CAP	VINYL PLASTIC	–

ENVIRONMENTAL

TEMPERATURE RATING: -65°C TO +105°C
VIBRATION: MIL-STD-202, METHOD 204, CONDITION D
SHOCK: MIL-STD-202, METHOD 213, CONDITION 1
MOISTURE RESISTANCE: MIL-STD-202, METHOD 106
CORROSION: MIL-STD-202, METHOD 101, CONDITION B.
THERMAL SHOCK: MIL-STD-202, METHOD 107, CONDITION B

MECHANICAL

INTERFACE DIMENSIONS: SEE CATALOG
RECOMMENDED MATING TORQUE: N/A
FORCE TO ENGAGE & DISENGAGE (IN-LBS MAX.) 3.0 & 1.5 RESPECTIVELY
WEIGHT (GRAMS): TBD
MATING CHARACTERISTICS: INSERTION (MAX LBS): 3.0
WITHDRAWAL (MIN OZ): 0.5
CABLE RETENTION: AXIAL FORCE (LBS): N/A
TORQUE (IN-OZ): N/A
CENTER CONTACT CAPTIVATION: AXIAL (LBS): 4.0
RADIAL (IN-OZ): N/A

ELECTRICAL

NORMAL IMPEDANCE (OHMS): 50±1
FREQUENCE RANGE (GHz): DC TO 12.4
VOLT RATING @ SEA LEVEL (VRMS MAX): 335
VSWR: T.B.D.
INSERTION LOSS: (dB MAX): T.B.D.
RF LEAKAGE (dB MIN): -[90-f(GHz)] (INTERFACE ONLY,FULLY MATED)
CORONA 70,000 FT (VRMS MIN): 250
DIELECTRIC WITHSTANDING VOLTAGE (VRMS MIN) AT SEA LEVEL: 675
I.R. (MEGOHMS MIN): 5000
RF HIGH POTENTIAL AT SEA LEVEL (VRMS MIN @ 5 MHz): 675
CONTACT RESISTANCE (MILLIOHMS MAX):
CENTER CONTACT: 6.0
OUTER CONTACT: 3.0
CABLE TO HOUSING: N/A

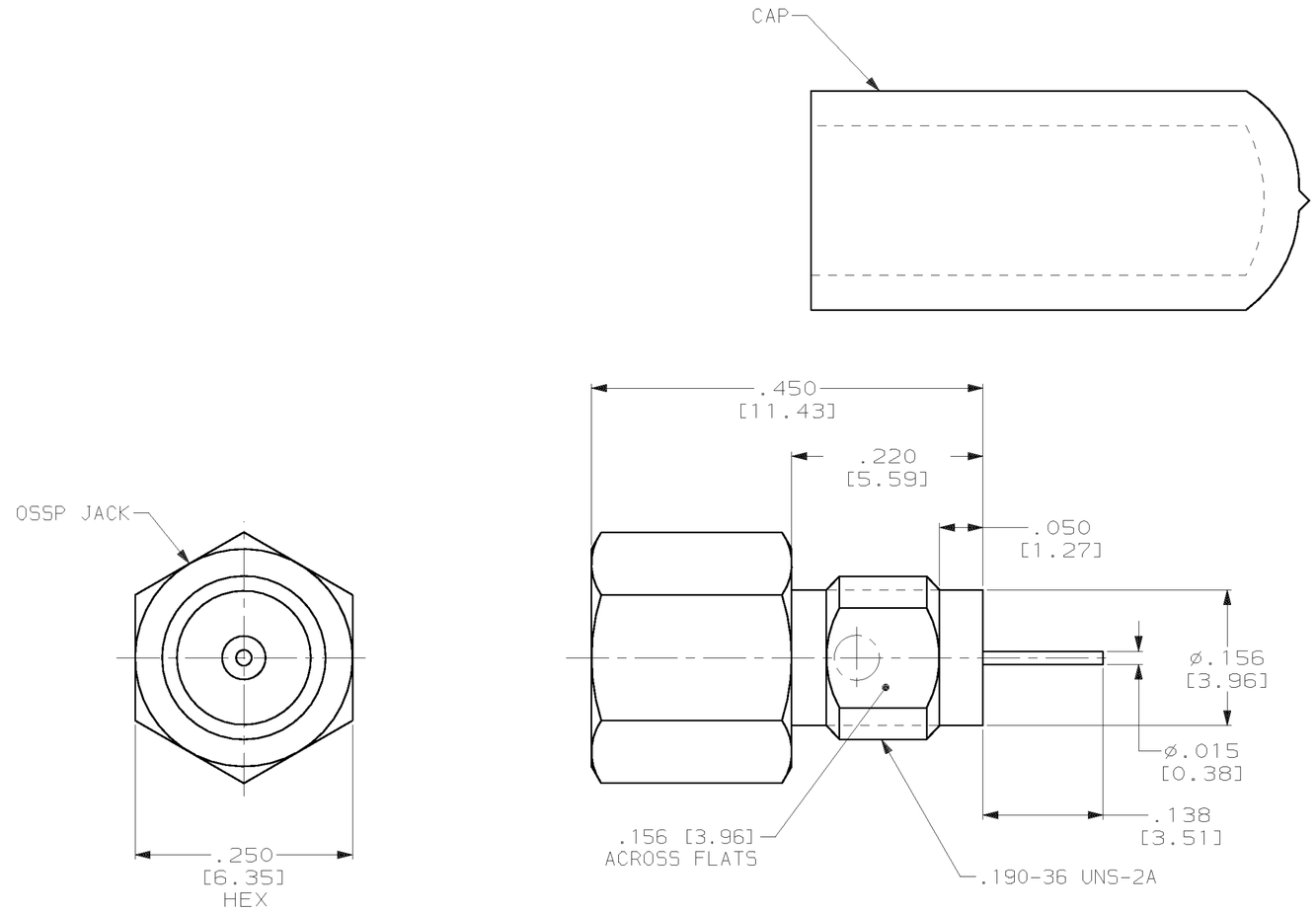

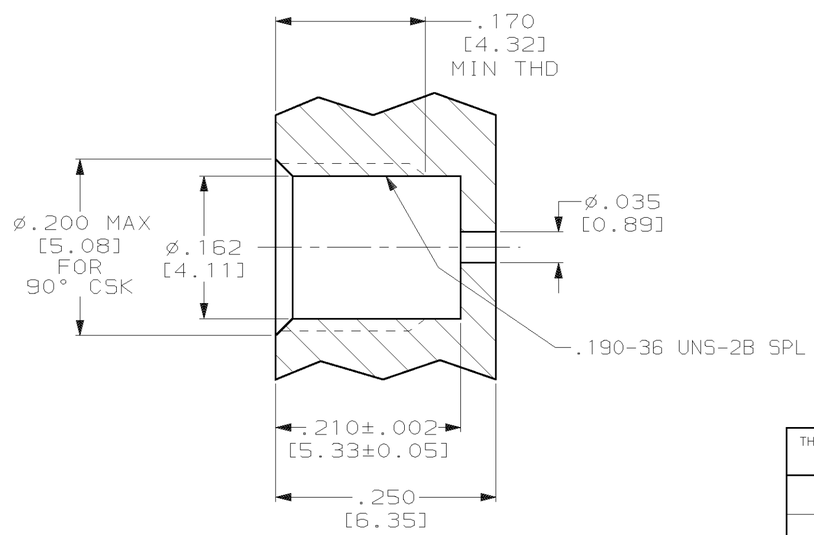

RECOMMENDED MOUNTING HOLE

1484350-1
PART NO.

THIS DRAWING IS A CONTROLLED DOCUMENT.

DIMENSIONS: INCHES [mm]

TOLERANCES UNLESS OTHERWISE SPECIFIED:
0 PLC ±-
1 PLC ±-
2 PLC ±-
3 PLC ±.005 [0.13]
4 PLC ±-
ANGLES ±-

MATERIAL: SEE TABLE
FINISH: SEE TABLE

DWN C.C.THOMAS 10-5-01
CHK R.GROSS 10-5-01
APVD R.GROSS 10-5-01
PRODUCT SPEC –
APPLICATION SPEC –
WEIGHT –
CUSTOMER DRAWING

AMP — TYCO Electronics Corporation, Harrisburg, PA 17105-3608

NAME: OSSP PANEL FEED-THRU JACK ASSY,RF

SIZE	CAGE CODE	DRAWING NO	RESTRICTED TO
A2	00779	C- 1484350	–

SCALE 8:1 SHEET 1 OF 1 REV 0

REF: 4758-5022-02