THIS DRAWING IS UNPUBLISHED. RELEASED FOR PUBLICATION APRIL ,2004.
© COPYRIGHT 2004 By – ALL RIGHTS RESERVED.

LOC	DIST
E	B

REVISIONS

P	LTR	DESCRIPTION	DATE	DWN	APVD
	A1	REVISED PER ECO-11-005033	01APR11	RK	HMR

NOTES:

1. SINGLE PACK IN ACCORDANCE WITH SPEC 107-3275
2. 100 TRAY PACK IN ACCORDANCE WITH SPEC 107-3275
3. 0.08µm Au PLATING OVER 1.27µm Ni PLATING
4. 0.08µm Au PLATING OVER 1.27µm Ni PLATING OVER 0.76µm Cu PLATING
5. 0.76µm Au PLATING OVER 1.27µm Ni PLATING OVER 0.76µm Cu PLATING
6. PASSIVATED
7. WHITE BRONZE PLATING
8. PLATING AS PER BODY, EXCEPT FOR PASSIVATED WHICH IS NICKEL PLATED
9. HAND TOOL 9-1478240-0
10. DIE SET 9-1478248-0
11. FOR TECHNICAL DATA REFER TO YOUR LOCAL TE CONNECTIVITY SALES OFFICE
12. ALL DIMENSIONS ARE NOMINAL FOR REFERENCE ONLY UNLESS OTHERWISE STATED

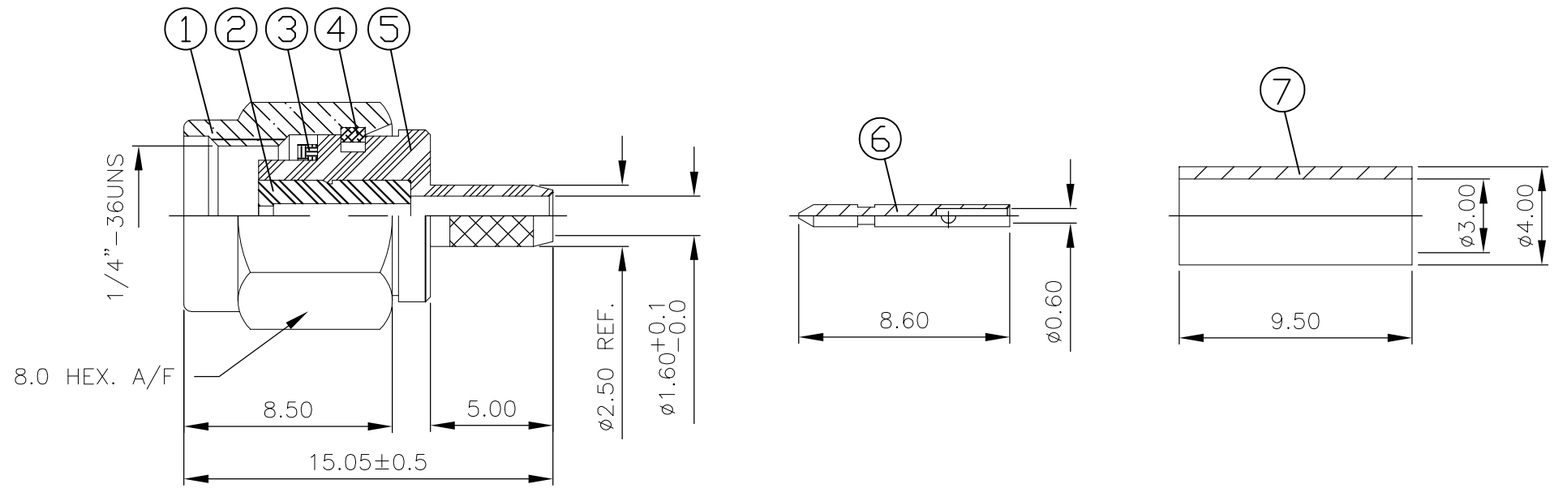

RECOMMENDED CRIMP SLEEVE A/F HEX

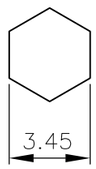

RECOMMENDED CABLE STRIPPING DIM'S

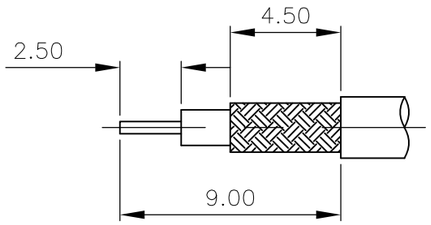

4--1	4--0	3--1	3--0	2--1	2--0	1--1	1--0	MATERIAL	DESCRIPTION	ITEM
1	1	1	1	1	1	1	1	BRASS (8)	CRIMP SLEEVE	7
1	1	1	1	1	1	1	1	BRASS (5)	CENTER CONTACT	6
1	1	–	–	–	–	–	–	BRASS (7)	BODY	5
–	–	1	1	–	–	–	–	BRASS (4)	BODY	5
–	–	–	–	1	1	–	–	STAINLESS STEEL (6)	BODY	5
–	–	–	–	–	–	1	1	STAINLESS STEEL (3)	BODY	5
1	1	1	1	1	1	1	1	STAINLESS STEEL	CIRCLIP	4
1	1	1	1	1	1	1	1	SILICON	GASKET	3
1	1	1	1	1	1	1	1	PTFE	INSULATOR	2
1	1	–	–	–	–	–	–	BRASS (7)	SHELL	1
–	–	1	1	–	–	–	–	BRASS (4)	SHELL	1
–	–	–	–	1	1	–	–	STAINLESS STEEL (6)	SHELL	1
–	–	–	–	–	–	1	1	STAINLESS STEEL (3)	SHELL	1
(2)	(1)	(2)	(1)	(2)	(1)	(2)	(1)			
QUANTITY PER ASSY								PARTS LIST		

THIS DRAWING IS A CONTROLLED DOCUMENT.

DIMENSIONS: mm

TOLERANCES UNLESS OTHERWISE SPECIFIED:

0 PLC	± –
1 PLC	± –
2 PLC	± –
3 PLC	± –
4 PLC	± –
ANGLES	± –

MATERIAL: SEE TABLE

FINISH: –

DWN	R.SMITH	03FEB04
CHK	S.PARLOW	03FEB04
APVD	F.WHEELER-KING	03FEB04
PRODUCT SPEC	108-3460	
APPLICATION SPEC	411-3276	
WEIGHT	–	

TE Connectivity

NAME: SMA STRAIGHT PLUG NON CAPTIVE SOLDER CONTACT CRIMP ATTACHMENT RG174A/U, 188A/U, 316/U, KX3B, KX22A

SIZE	CAGE CODE	DRAWING NO	RESTRICTED TO
A3	00779	C-1478916	–

CUSTOMER DRAWING

SCALE	SHEET	REV
1:1	1 OF 1	A1