THIS DRAWING IS UNPUBLISHED. RELEASED FOR PUBLICATION 20
© COPYRIGHT 20 BY - ALL RIGHTS RESERVED.

REVISIONS

P	LTR	DESCRIPTION	DATE	DWN	APVD
	B	REDRAWN/REVISED PER ECO-17-001745	30NOV2017	KS	JO

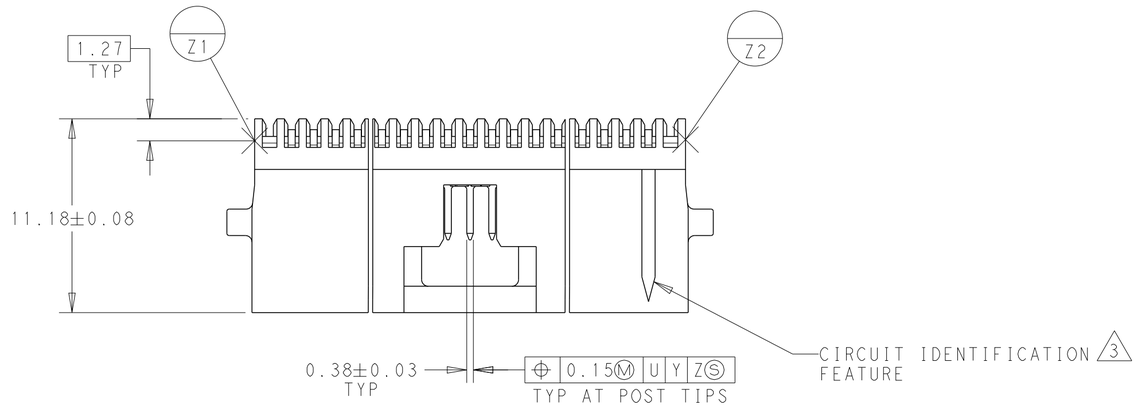

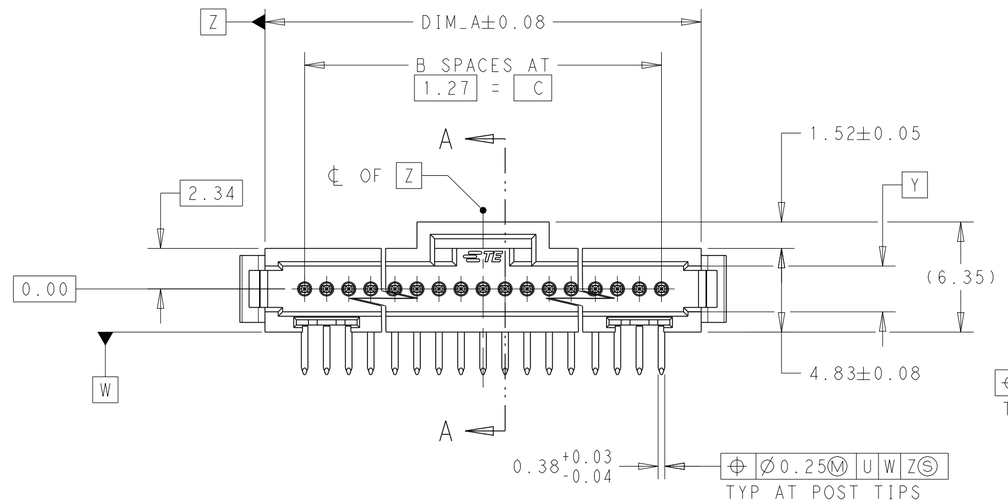

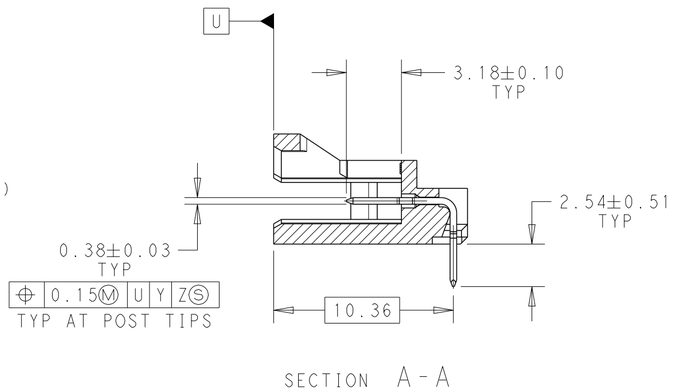

1. CONTACT AREAS PLATED WITH 0.76µm GOLD, SOLDER TAILS PLATED WITH 3.81µm TIN-LEAD, ALL OVER 1.27µm NICKEL.

2. NOTE DELETED.

3. CIRCUIT IDENTIFICATION FEATURE OMITTED ON 4,5,6 & 7 POSITION HEADER ASSEMBLIES

4. DOMENSION APPLIES AT BASE OF SHROUD

5. THE NOTED DIMENSIONS APPLY AT THE INTERSECTION OF THE POST AND HOUSING

6. CONTACT AREAS PLATED WITH 0.76µm GOLD, SOLDER TAILS PLATED WITH 3.81µm TIN, ALL OVER 1.27µm NICKEL

7. NOTE DELETED.

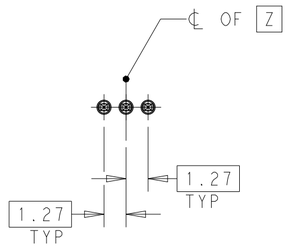

BASIC DIMENSION FOR EVEN NO OF SPACES (SEE TABLE)

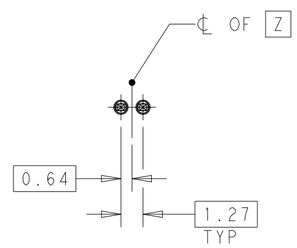

BASIC DIMENSION FOR ODD NO OF SPACES (SEE TABLE)

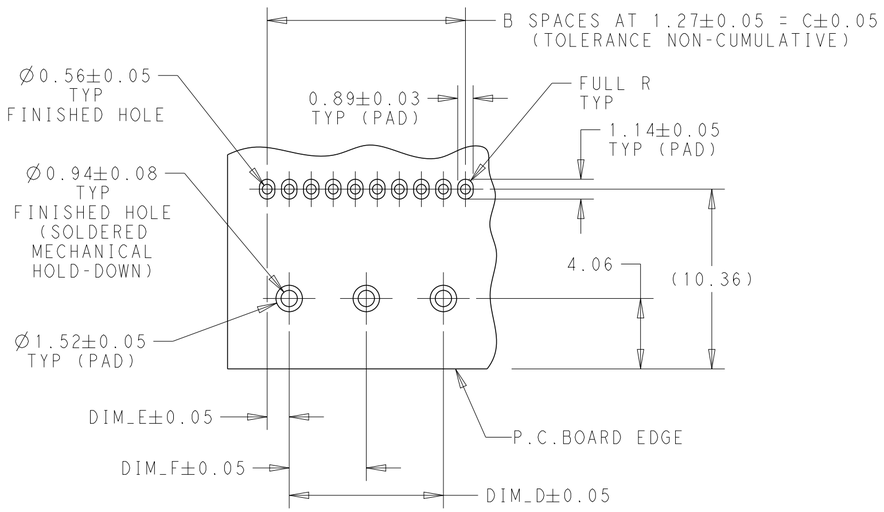

RECOMMENDED HOLE PATTERN

DIM_F	DIM_E	DIM_D	DIM_C	B SPACES	DIM_A	NO OF POSN	PART NUMBER
17.14	1.27	34.29	36.83	29	41.40	30	6 5-146880-2
-	1.27	27.94	30.48	24	35.05	25	6 5-146880-1
17.14	1.27	34.29	36.83	29	41.40	30	146880-2
-	1.27	27.94	30.48	24	35.05	25	146880-1

THIS DRAWING IS A CONTROLLED DOCUMENT.

DIMENSIONS: mm

TOLERANCES UNLESS OTHERWISE SPECIFIED:
0 PLC ±-
1 PLC ±0.3
2 PLC ±0.13
3 PLC ±-
4 PLC ±-
ANGLES ±5°

MATERIAL - -
FINISH - -

DWN K.SHRISHAIL 30NOV2017
CHK J.OLSON 30NOV2017
APVD J.OLSON 30NOV2017
PRODUCT SPEC -
APPLICATION SPEC -
WEIGHT -

TE Connectivity

NAME HEADER ASSEMBLY, RIGHT ANGLE, SINGLE ROW, W/SIDE & END LATCHES, AMPMODU SYSTEM 50

SIZE A2 | CAGE CODE 00779 | DRAWING NO C-146880 | RESTRICTED TO

CUSTOMER DRAWING | SCALE 4:1 | SHEET 1 OF 1 | REV B

1471-9 (3/13)