THIS DRAWING IS UNPUBLISHED. RELEASED FOR PUBLICATION -,- .
© COPYRIGHT - By - ALL RIGHTS RESERVED.

LOC	DIST
H	—

REVISIONS

P	LTR	DESCRIPTION	DATE	DWN	APVD
	H2	ECR-11-021528	29DEC11	RK	JK

NOTES:

1. FOR PRODUCT NUMBER, REVISION STATE AND LENGTH "L" SEE DASHNUMBER TABLE
2. POSITION 1
3. CABLE ASSEMBLIES TO BE PACKAGED ACCORDING PACKAGING SPECIFICATION 107-19665
4. OBSOLETE PARTS: OBSOLETE CIS STREAMLINING PER D.RENAUD/D.SINISI

	ERICSSON PRODUCT NUMBER AND REVISION STATE	LENGHT "L"	TE PART NUMBER
OBSOLETE	RPM 513 1903/01650 R1A	1650±17	~~0-1449099-1~~
4 OBSOLETE	RPM 513 1903/02250 R1A	2250±23	~~0-1449099-2~~
	RPM 513 1903/02230 R1A	2230±23	0-1449099-3
	RPM 513 1903/01100 R1A	1100±11	0-1449099-4

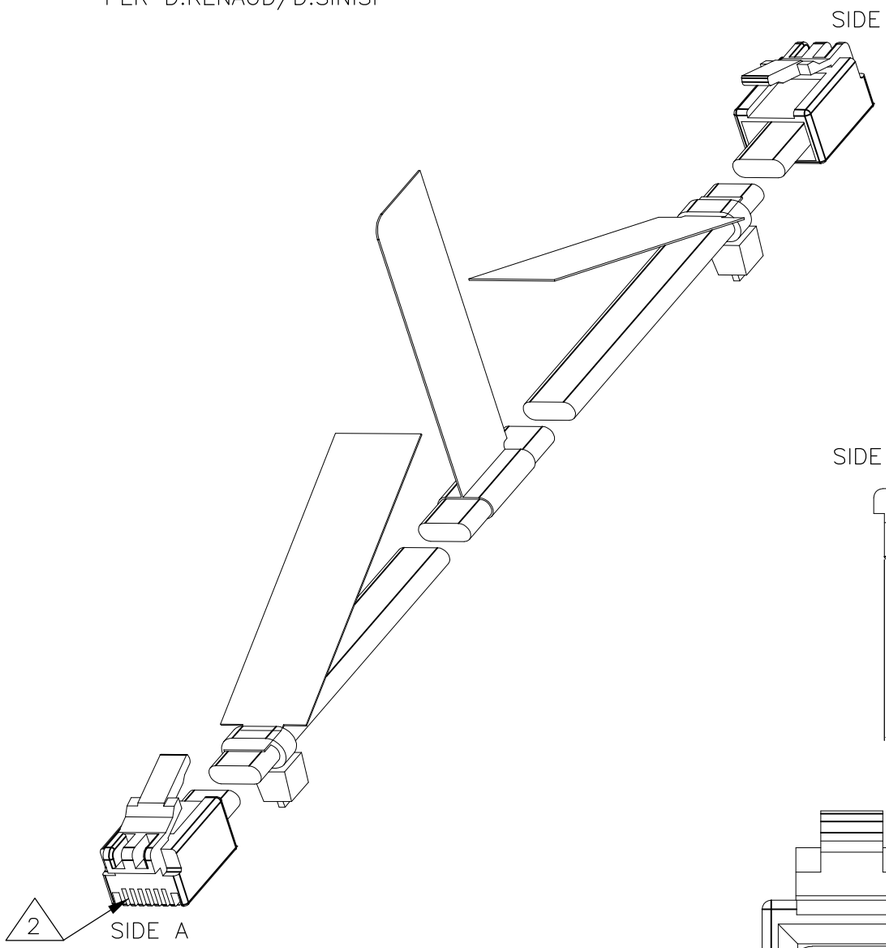

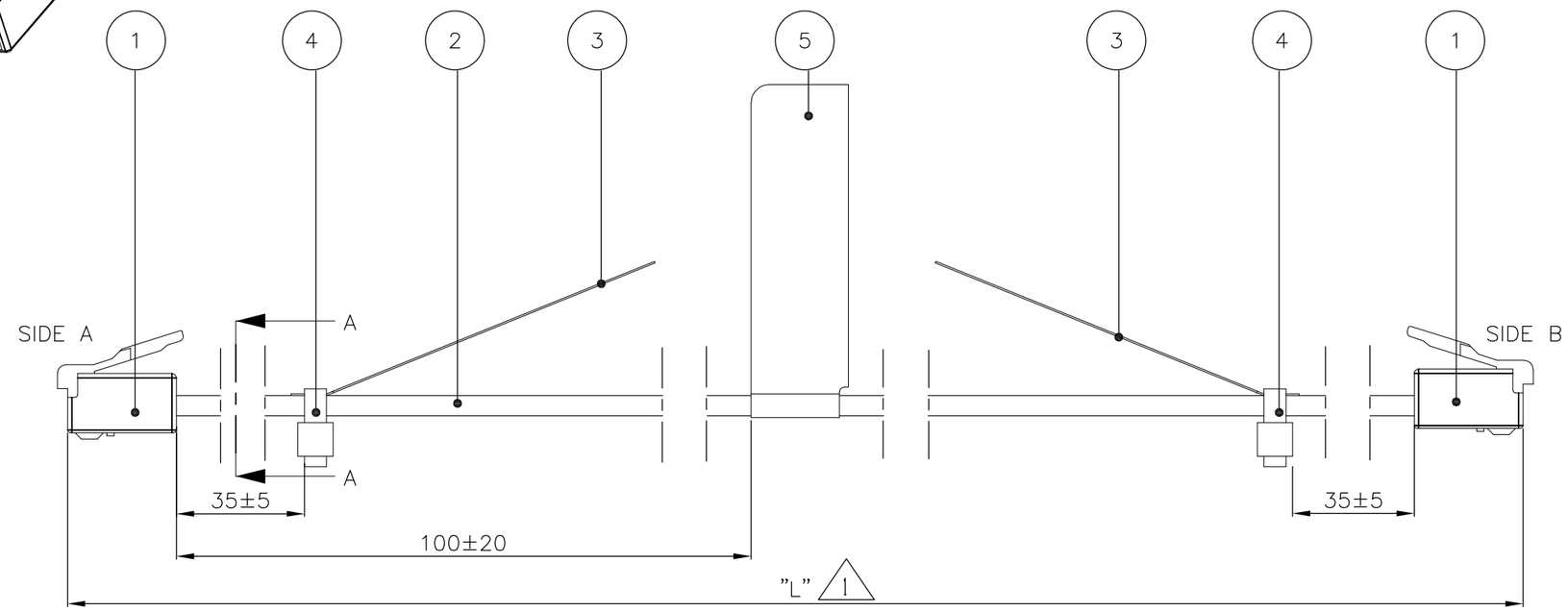

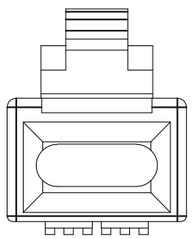

6 ← 1 6

SECTION A-A
SCALE 3:1

WIRING TABLE		
SIDE A	COLOUR	SIDE B
1	GREEN	6
2	BLUE	5
3	WHITE	4
4	RED	3
5	BROWN	2
6	BLACK	1

ITEM	ERICSSON PART NUMBER	TE PART NUMBER	DESCRIPTION	QTY
5	LZF 083 278/1	0-1294995-1	LABEL	1
4	SET 103 15	4-160967-1	CABLE TY	2
3	860 1839	0-1344978-1	LABEL HOLDER	2
2	TNA 521 02/06	0-1449291-1	6 POS. RIBBON CABLE 26 AWG	-
1	RPV 403 08/6	5-641337-3	6 POS. MODULAR JACK CONNECTOR	2

THIS DRAWING IS A CONTROLLED DOCUMENT.

DIMENSIONS: mm

TOLERANCES UNLESS OTHERWISE SPECIFIED:
0 PLC ± -
1 PLC ± 0.2
2 PLC ± 0.02
3 PLC ± 0.005
4 PLC ± -
ANGLES ± -

MATERIAL -
FINISH -

DWN T.BURZUŃSKI 18-01-07
CHK W.MOONEN 18-01-07
APVD R.SMEETS 18-01-07
PRODUCT SPEC —
APPLICATION SPEC —
WEIGHT —

TE Connectivity

NAME CXU AND OXU 5 CABLE

SIZE	CAGE CODE	DRAWING NO	RESTRICTED TO
A3	00779	C-1449099	—

CUSTOMER DRAWING | SCALE NTS | SHEET 1 OF 1 | REV H2