THIS DRAWING IS UNPUBLISHED. RELEASED FOR PUBLICATION 20
© COPYRIGHT 20 BY - ALL RIGHTS RESERVED.

REVISIONS

P	LTR	DESCRIPTION	DATE	DWN	APVD
	A	INITIAL REL. PER LC20-0123-13	19NOV2013	DM	BJ
	B	LC20-0029-15 / ECO-15-007234	12MAY2015	DM	BJ
	B1	LC20-0086-15 / ECO-15-009530	24JUN2015	DM	BJ

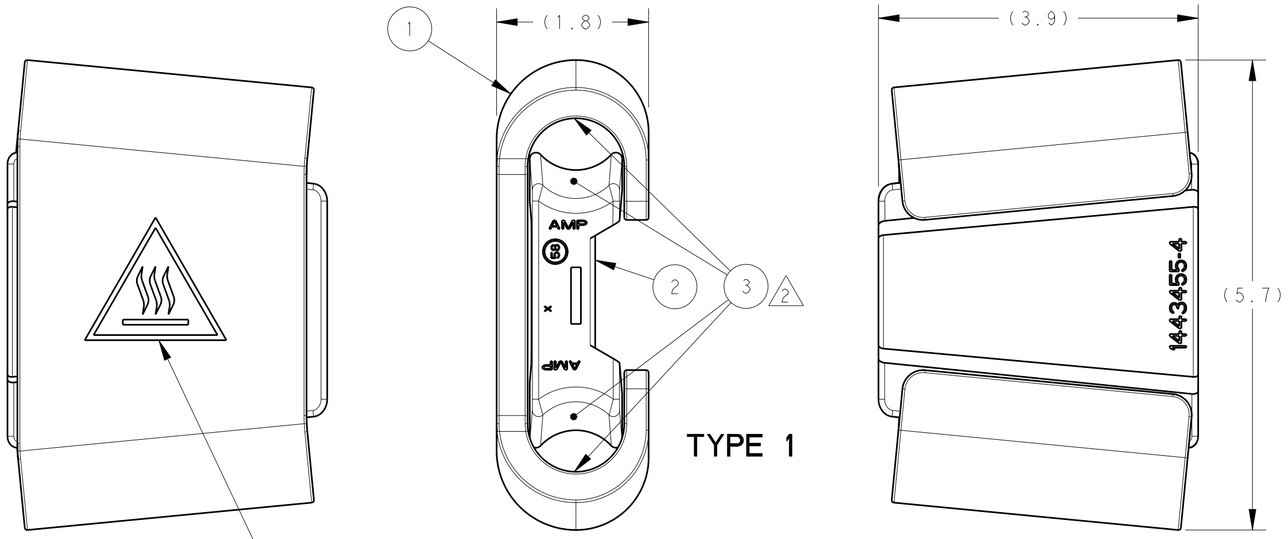

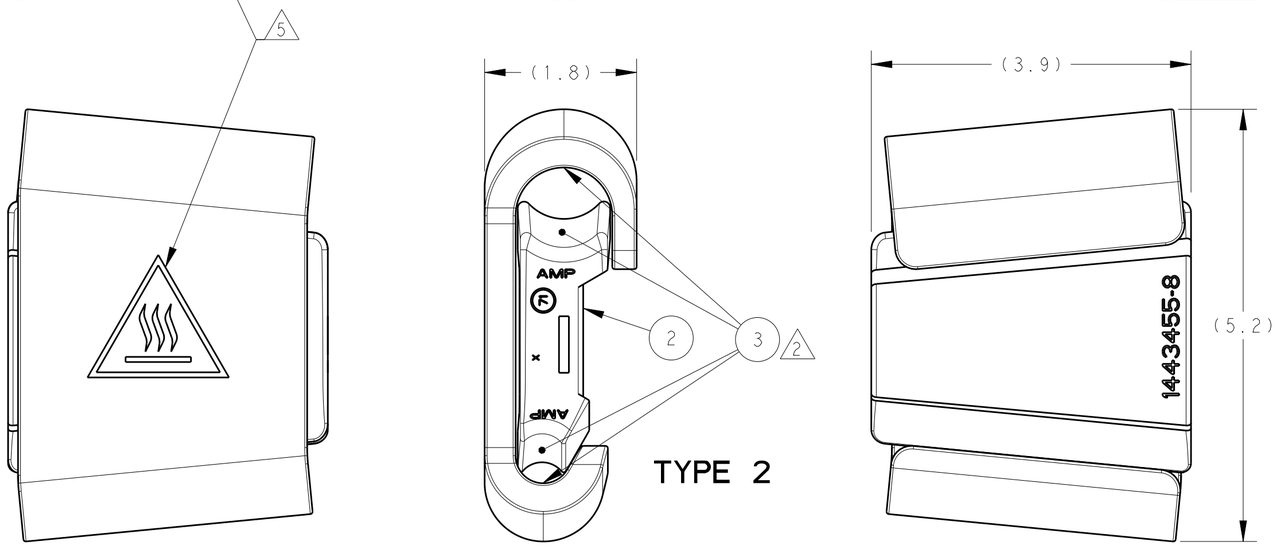

TYPE	TAP CONDUCTOR	RUN CONDUCTOR	WEDGE I.D.	PART NO.
2	266.8 ACSS	795.0 ACSS	71	1443455-8
1	336.4 ACSS	795.0 ACSS	50	1443455-7
1	397.5 ACSS	795.0 ACSS	49	1443455-6
1	636.0 (20/7) ACSS/TW GROSBEAK	636.0 (20/7) ACSS/TW GROSBEAK		
1	477.0 ACSS	795.0 ACSS	48	1443455-5
1	556.5 ACSS	795.0 ACSS	58	1443455-4
1	636.0 ACSS	795.0 ACSS	56	1443455-3
1	715.5 ACSS	795.0 ACSS	51	1443455-2
1	795.0 ACSS	795.0 ACSS	47	1443455-1

-8	-7	-6	-5	-4	-3	-2	-1	DESCRIPTION		ITEM NO
A/R	A/R	A/R	A/R	A/R	A/R	A/R	A/R	INHIBITOR, HIGH TEMP		3
1	-	-	-	-	-	-	-	795.0-266.8	WEDGE, ALUMINUM ALLOY	2
-	1	-	-	-	-	-	-	795.0-336.4		
-	-	1	-	-	-	-	-	795.0-397.5		
-	-	-	1	-	-	-	-	795.0-477.0		
-	-	-	-	1	-	-	-	795.0-556.5		
-	-	-	-	-	1	-	-	795.0-636.0		
-	-	-	-	-	-	1	-	795.0-715-5		
-	-	-	-	-	-	-	1	795.0-795.0		
1	-	-	-	-	-	-	-	C BODY, ASYMMETRICAL, ALUMINUM ALLOY		1
-	1	1	1	1	1	1	1	C BODY, SYMMETRICAL, ALUMINUM ALLOY		
QTY PER ASSY								PARTS LIST		

1. CORRESPONDING WIRE SIZES TO RUN AND TAP SIDE ARE MARKED ON THE WEDGE.
2. INHIBITOR IS APPLIED AT FACTORY, TO GROOVES OF WEDGE AND C BODY.
3. DIMENSIONS ARE FOR REFERENCE ONLY.
4. USE YELLOW CODED SHELL NO: 69338-4 WITH AMPACT TOOL P/N: 69611.
5. "HOT SURFACES" IDENTIFICATION SYMBOL AS PER IEC 417 IS INK STAMPED ON CONNECTOR BODY.

THIS DRAWING IS A CONTROLLED DOCUMENT.

DIMENSIONS: INCHES

TOLERANCES UNLESS OTHERWISE SPECIFIED:
0 PLC ±
1 PLC ±
2 PLC ±
3 PLC ±
4 PLC ±
ANGLES ±

MATERIAL: SEE DWG
FINISH: NONE

DWN D. MURUGIAH 19NOV2013
CHK B. JOHNSON 19NOV2013
APVD B. JOHNSON 19NOV2013
PRODUCT SPEC -
APPLICATION SPEC -
WEIGHT -

TE Connectivity

NAME: WEDGE TAP CONNECTOR, 795/636 SERIES, YELLOW CODED, HIGH TEMP, AMPACT

SIZE A2 | CAGE CODE - | DRAWING NO C-1443455 | RESTRICTED TO -

Customer Drawing | SCALE NTS | SHEET 1 OF 1 | REV B1

1471-9 (3/13)