THIS DRAWING IS UNPUBLISHED. RELEASED FOR PUBLICATION -,- .
© COPYRIGHT - BY TYCO ELECTRONICS CORPORATION. ALL RIGHTS RESERVED.

LOC	DIST
AD	00

REVISIONS

P	LTR	DESCRIPTION	DATE	DWN	APVD
	0	ECO 05 014276	21MAR06	BSV	MS

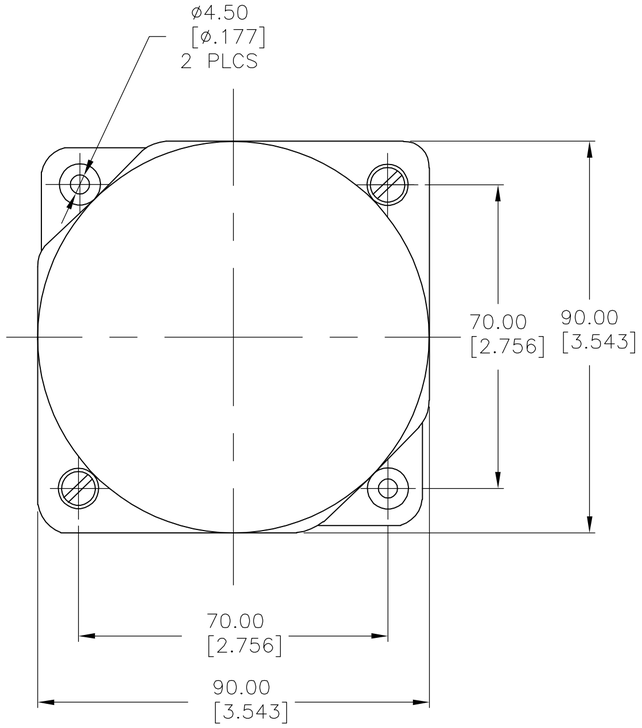

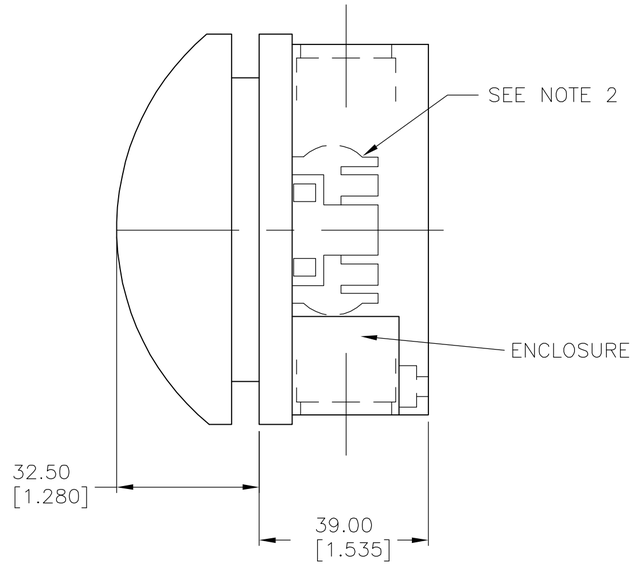

NOTES: UNLESS OTHERWISE SPECIFIED

1. SWITCH TO HAVE RED MUSHROOM PUSH BUTTON AND YELLOW BASE.
2. REFERENCE 1-1437612-3 DRAWING FOR CONTACT BLOCK SPECIFICATIONS.
3. MEETS IP65 PROTECTION LEVEL.
4. CONTACT BLOCKS SUPPLIED PER PART NUMBER TABLE.

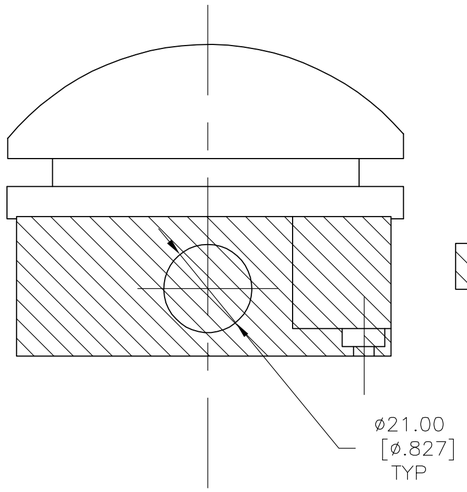

INDICATES ENCLOSURE PORTION-MODELS WITHOUT THIS PORTION ARE NOTED IN THE PART NUMBER TABLE

ENCLOSURE	ACTION	BASE COLOR	BUTTON COLOR	BLOCK TYPE	# OF BLOCKS	T&B P/N	TYCO P/N
WITHOUT	MOMENTARY	GREY	RED	V40 (N.C)	ONE	4093	1-1437616-3
WITHOUT	MOMENTARY	YELLOW	RED	V40 (N.C)& V50 (N.O)	TWO	4091	1-1437616-2
WITH	MOMENTARY	YELLOW	RED	V40 (N.C)& V50 (N.O)	TWO	4090	1-1437616-1

THIS DRAWING IS A CONTROLLED DOCUMENT.

DIMENSIONS: mm [INCHES]

TOLERANCES UNLESS OTHERWISE SPECIFIED:
0 PLC ± -
1 PLC ± -
2 PLC ± 0.30[.012]
3 PLC ± -
4 PLC ± -
ANGLES ± 1°

MATERIAL -

FINISH -

DWN CMM 22MAY90
CHK -
APVD -
PRODUCT SPEC -
APPLICATION SPEC -
WEIGHT -

CUSTOMER DRAWING

tyco Electronics
Tyco Electronics Corporation
Harrisburg, Pa 17105-3608

NAME
MOMENTARY OIL-TIGHT 3 1/2
JUMBO MUSHROOM
PUSHBUTTON SWITCH

SIZE	CAGE CODE	DRAWING NO	RESTRICTED TO
A2	00779	C-1437616-1	-

SCALE 1:1 SHEET 1 OF 1 REV 0

1437616-1