© TE Connectivity. All Rights Reserved.

REVISIONS 変更					
P	LTR	DESCRIPTION	DATE	DWN	APVD
	A	INITIAL RELEASE	17JUL2020	SE	DT

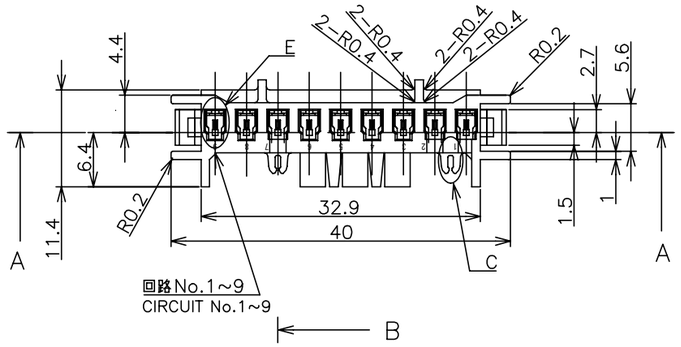

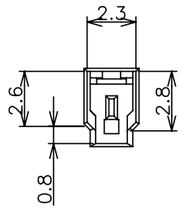

DETAIL E
(5:1 同形状9ヶ所))
SAME SHAPE 9 POSITION

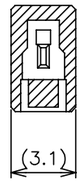

SECT D-D
(5:1 同形状9ヶ所)
SAME SHAPE 9 PLACES

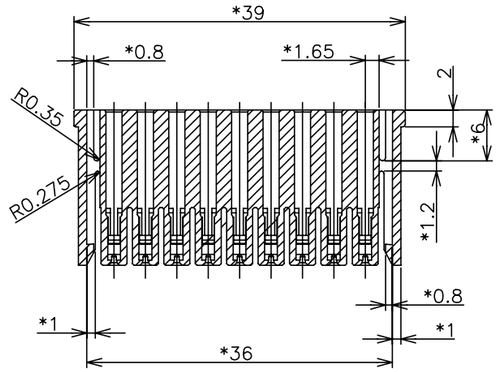

SECT A-A

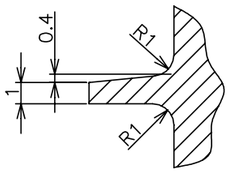

SECT F-F
(5:1 同形状3ヶ所)
SAME SHAPE 3 PLACES

寸法の区分 DIVISION OF DIMENSION		樹脂射出成形 INJECTION MOLDING
	6以下 LESS THAN 6	±0.16
6を越え MORE THAN 6	30以下 LESS THAN 30	±0.2
30を越え MORE THAN 30	120以下 LESS THAN 120	±0.4
120を越え MORE THAN 120	300以下 LESS THAN 300	±0.8
300を越え MORE THAN 300	600以下 LESS THAN 600	±2.0
600を越え MORE THAN 600	1200以下 LESS THAN 1200	±4.0

一般公差表
GENERAL TOLERANCE(TABLE 1)

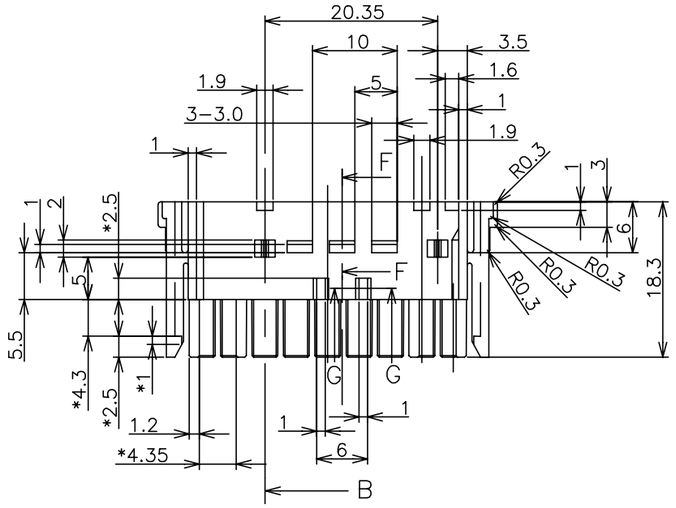

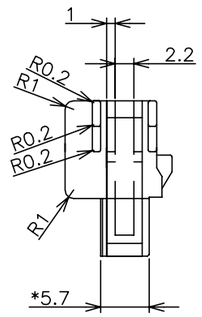

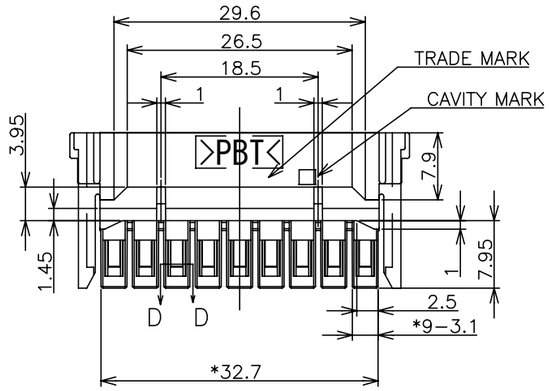

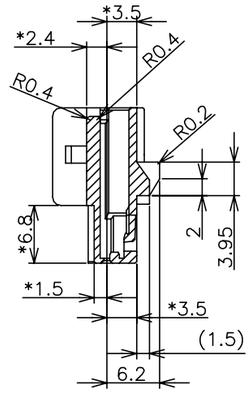

SECT B-B

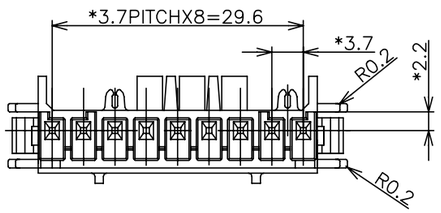

NOTES
1) M.SPEC.
   1.MATERIAL:PBT(GLASS15%). UL94V-0. CTI 175 OR MORE
   2.COLOR:NATURAL
2)P. & I.SPEC.
   1. DETAIL DEPENDS ON THE SPEC DOCUMENTS OF SUPPLIER.
   2. BEFORE MAKE DIE MOULD SHOULD DISCUSS DRAFT.
   3. BEFORE MAKE DIE MOULD SHOULD DISCUSS GATE, PARTING LINES WITH ENGINEERING SEC.
   4. THE SINK MARKS AND WELD LINES AND FLASH ON THE SURFACE SHALL BE CONTROLLED REFERRING TO TOLERANCE SAMPLE.
   5. UNLESS OTHERWISE SPECIFIED TOLERANCE DEPENDS ON THE GENERAL TOLERANCE(TABLE 1).
      THE DIMENSION WITH * DOES NOT APPLY THE GENERAL TOLERANCE(TABLE 1).
   6. INDICATED DIMENSIONS SHOULD BE CHECKED AFTER LEFT FOR MORE THAN 24h AFTER THE SAMPLE IS MOULDED. (STANDARD TEMPERATURE IS 20℃)
   7. MOULDING NOTICE
      I .PRE-HEAT AND DRY THE PELLET TO AVOID THE DISINTEGRATION BY WATER.
      II .STRICTLY CONTROL THE REMAINING TIME OF MELT MATERIAL IN THE CYLINDER TO AVOID CHANGE IN QUALITY BY HEAT.
      III.HAVE AN ENOUGH MEETING ABOUT MOULDING CONDITION WITH MATERIAL MAKER.
   8. MATERIAL INDICATING MARK IS >PBT<, LETTER HEIGHT IS 12P(3mm). LETTER IS GOTHIC TYPE.
   9. LEAD WIRES OF THERMAL FUSE SHOULD NOT COME OFF BY 3N AT C AREA. (2 POSITIONS) (TO BE ADJUSTED)
   10. ENGAGEMENT STRENGTH OF RECEPTACLE WITH TERMAL IS 20N OR MORE.
   11. MOULDING AREA PRODUCT THICKNESS:0.4mm MIN.

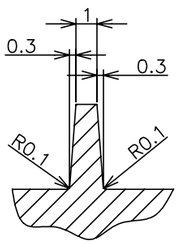

SECT G-G
(5:1 同形状2ヶ所)
SAME SHAPE 2 PLACES

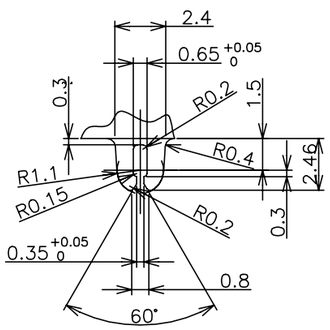

DETAIL C
(5:1 同形状2ヶ所)
(5:1 SAME SHAPE 2 PLACES)

1376280

THIS DRAWING IS A CONTROLLED DOCUMENT.	DWN T.ISHIKAWA 27APR'00	TE Connectivity	1376280-1 製品型番(P/N)
DIMENSIONS: 単位: 粍 mm	CHK M.SHINDO 27APR'00		
TOLERANCES UNLESS OTHERWISE SPECIFIED: 一般公差 0 PLC ± – 1 PLC ± – 2 PLC ± – 3 PLC ± – 4 PLC ± – ANGLES ± – (SEE TABLE 1)	APVD M.SHINDO 27APR'00	NAME 名称 TERMINAL B	
	PRODUCT SPEC 製品規格 108-5698-1		
	APPLICATION SPEC 取付適用規格 –		
MATERIAL 材料 SEE NOTE	WEIGHT 0	SIZE A2 / CAGE CODE / DRAWING NO 番号 C-1376280	RESTRICTED TO –
FINISH 仕上 –	CUSTOMER DRAWING	SCALE 尺度 1:1 / SHEET 1 OF 1	REV A

1471-9 (1/15)