THIS DRAWING IS UNPUBLISHED. RELEASED FOR PUBLICATION 20
© COPYRIGHT 20 BY - ALL RIGHTS RESERVED.

REVISIONS					
P	LTR	DESCRIPTION	DATE	DWN	APVD
	A	REVISED PER ECO-06-010592	08MAY2006	KF	GM
	B	REVISED PER ECO-14-007035	12MAY2014	DLD	DCM

DRAFT PER SIDE (REFERENCE)	A	B	C	D
0°30′	18.30±0.10	18.60±0.10	15.30±0.10	15.60±0.10
1°0′	$18.05^{+0.15}_{-0.05}$	$18.65^{+0.05}_{-0.15}$	$15.05^{+0.15}_{-0.05}$	$15.65^{+0.05}_{-0.15}$

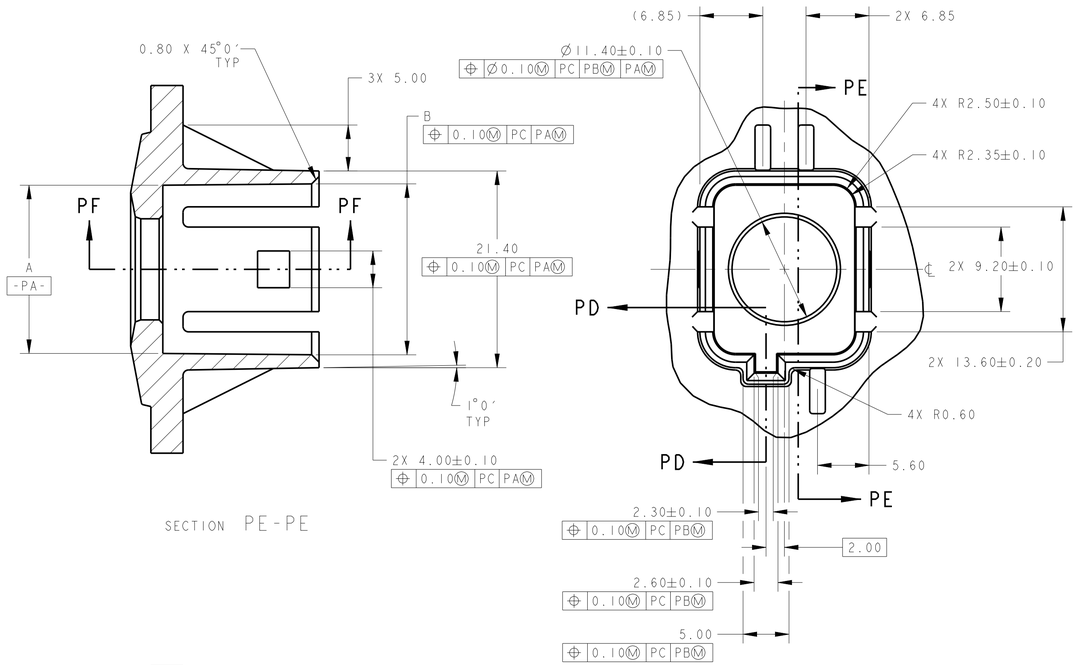

SECTION PE-PE

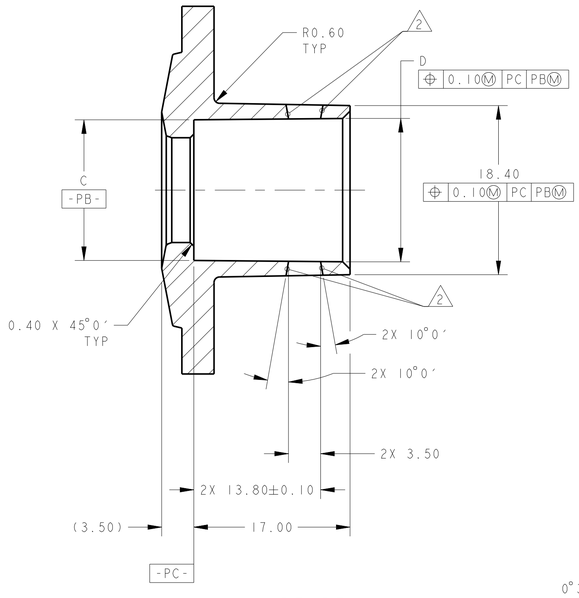

SECTION PF-PF

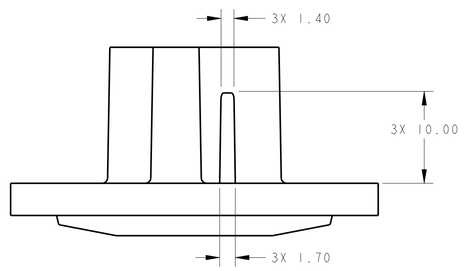

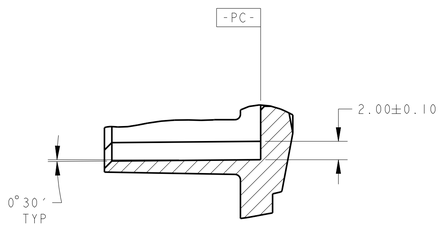

SECTION PD-PD

RECOMMENDED PANEL CUT-OUT
SCALE 3:1

PANEL CUT-OUT NOTES:

1. RECCOMENDED MATERIAL, PC / ABS.
2. SUFACE TO BE FLASH FREE.
3. ALL TOLERANCES ARE ±0.30 UNLESS OTHERWISE SPECIFIED.

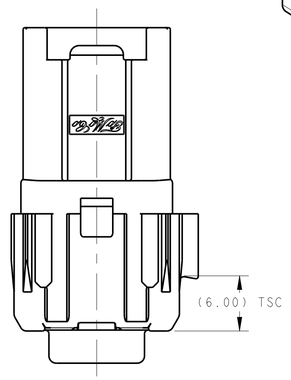

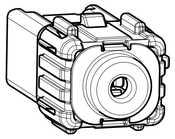

SCALE 2:1

SCALE 2:1

1. MATES WITH 4 POSITION GET CONNECTOR, TE P/N 5-1419169-2, (FORD P/N 1L2T-14489-GB).
2. MATES WITH Ø3.5mm PLUG PER JIS C 6560.
3. MATERIAL:
   HOUSING: PBT, GLASS FILLED, BLACK.
   COLLAR: CuZn.
   CONTACTS: CuSn.
4. FINISH:
   COLLAR: Ni PLATE.
   CONTACTS: SELECTIVE Sn AND Ni PLATE.
5. PIN TO SIGNAL DIAGRAM - SEE TABLE.
6. MATERIAL ID, DATE CODE (DDDYS), AND FORD PART NUMBER, ON THIS SURFACE.
7. BOTH ASSEMBLIES USE SAME COMPONENTS. LASER MARKING DIFFERENCE ONLY.

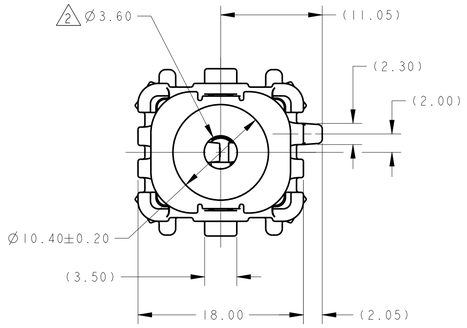

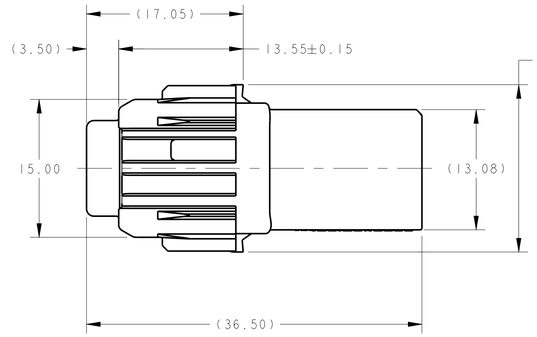

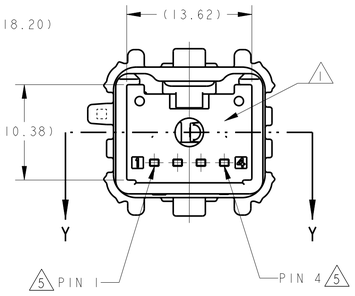

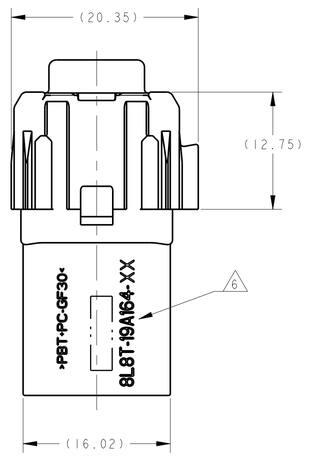

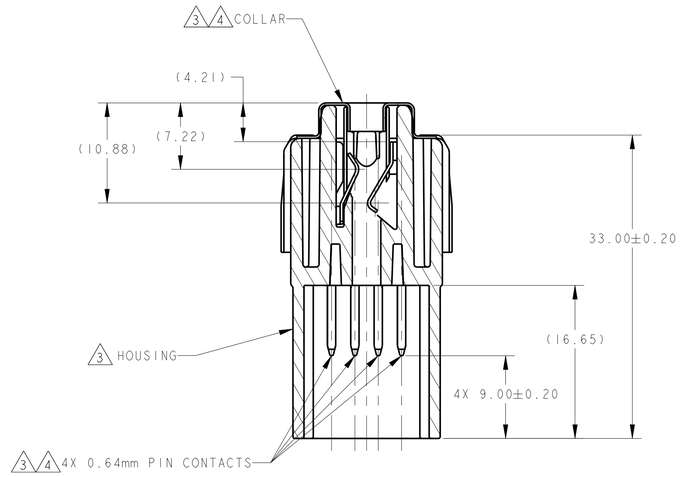

SECTION Y-Y

4	LEFT CHANNEL	AUDIO LINE
3	SIGNAL GROUND	GROUND
2	SIGNAL GROUND	GROUND
1	RIGHT CHANNEL	AUDIO LINE
PIN	SIGNAL NAME	DESCRIPTION

PIN TO SIGNAL DIAGRAM TABLE 5

8L8T-19A164-A1B	2272419-1
8L8T-19A164-AB	1326964-1
FORD PART NUMBER	PART NUMBER

THIS DRAWING IS A CONTROLLED DOCUMENT.

DIMENSIONS: mm

TOLERANCES UNLESS OTHERWISE SPECIFIED:
0 PLC ±-
1 PLC ±-
2 PLC ±0.10
3 PLC ±-
4 PLC ±-
ANGLES ±0°30′

MATERIAL - 3
FINISH - 4

DWN K.FOLTZ 16MAR2005
CHK G. MARTIN 17MAR2005
APVD G. MARTIN 17MAR2005
PRODUCT SPEC -
APPLICATION SPEC -
WEIGHT -

TE Connectivity

NAME ASSEMBLY, AUXILIARY INPUT JACK, MINI ADAPTER FOR 0.64mm, 4 POSITION GET

SIZE	CAGE CODE	DRAWING NO	RESTRICTED TO
A1	00779	C-1326964	-

CUSTOMER DRAWING | SCALE 3:1 | SHEET 1 OF 1 | REV B

4805 (3/13)