THIS DRAWING IS UNPUBLISHED. RELEASED FOR PUBLICATION 1999
© COPYRIGHT 1999 BY TYCO ELECTRONICS CORPORATION. ALL RIGHTS RESERVED.

PROJECT NO.: -

LOC	DIST
A1	-

PROJEKT NO.
A98-52206
B916704

REVISIONS

P	LTR	DESCRIPTION	DATE	DWN	APVD
	D	SEE PCN EG00-3061-00	19-DEC-00	A.Ri	HSCH
	E	SEE PCN E-06-023728	09-OKT-06	LG	HSCH
	B	SEE PCN EG00 1264 00	30-MAY-00	A.Ri	
	C	SEE PCN EG00 2038 00	05-SEP-00	A.Ri	HSCH

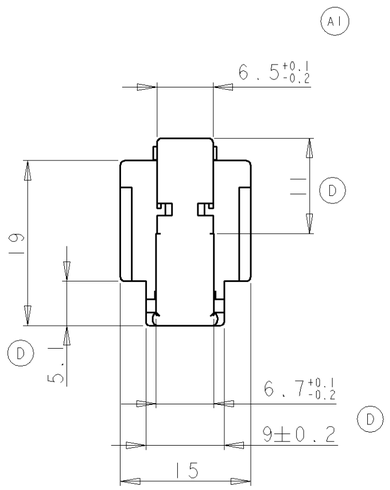

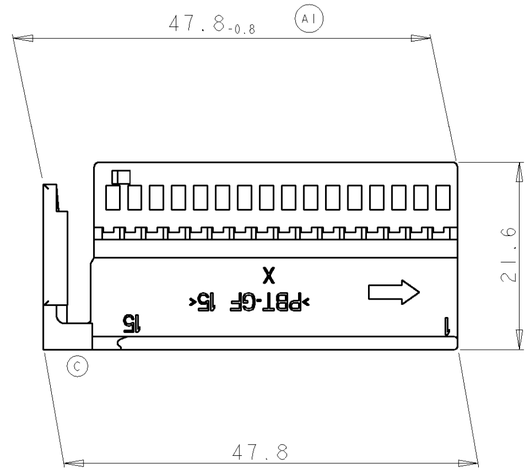

114-18063-078	-	INTERFACE DRAWING
0-1355589-1	1	AMP MODU II PINHEADER 32POS.; COD A 90°, RIGHT
0-1355587-1/-2	1	AMPMODU II PINHEADER 32POS. ; COD A/B 180°
0-1355541-1/-2	1	COVER WITH SLIDE, COD A/B , 180° CABLEOUTLET
AMP BESTELL-NR. AMP ORDER NO.	STK. QTY.	BENENNUNG DESCRIPTION
COUNTERPARTS GEGENSTECKER		

NOTES
Bemerkungen

- (E) 1 tyco- or AMP-LOGO / tyco- oder AMP-Logo
- 2 ORDER-NUMBER / Bestell-Nummer
- 3 REVISIONS-NUMBER / Werkzeugaenderungsindex
- - GM-LOGO / GM-Logo
- 5 CAVITY MARKING / Nestmarkierung
- (E) (B) - CUSTOMER SIGN / Kunden-Kurzzeichen
- 7 PACKAGING IN CARTON / Verpackung in Karton
- 8 MATERIAL MARKING / Werkstoffkennzeichnung
- 9 PRODUCTION-DATE / Produktions-Datum

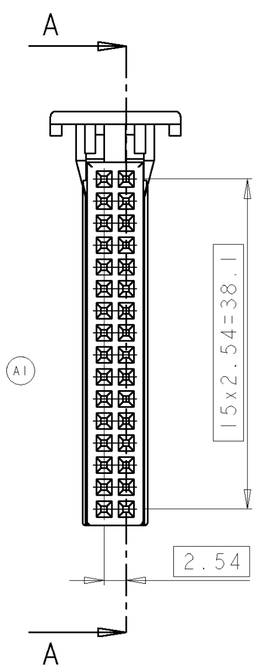

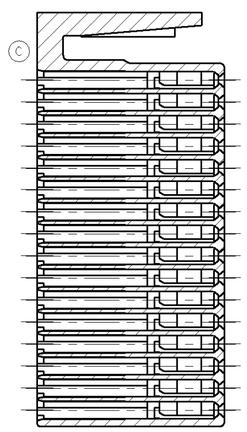

A - A

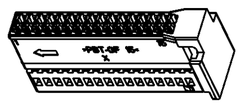

1 : 1

0-1241724-2	E	MQS REC. HSG.	PBT - GF15	BLUE	-
0-1241724-1	E	MQS REC. HSG.	PBT - GF15	BLACK	-
AMP PART-NO	REV -	DESCRIPTION	MATERIAL	SURFACE COLOR	ITEM NO

(A1)

MICRO QUADLOK Buchsenkontakt						
0-963715-1	0-963729-1	>0.5-0.75	CuNiSi	vorverzinnt	0-878591-2	0-734464-1
0-928999-1	0-963726-1	0.2-0.5	CuNiSi	vorverzinnt	0-878439-2	0-734237-2
AMP Bestell-Nummer		DGB in mm²	Werkstoff	Oberfläche	Crimp-Werkzeuge	
Bandware	Einzelausführung				Masch.-werkz.	Handzange

THIS DRAWING IS A CONTROLLED DOCUMENT FOR TYCO ELECTRONICS CORPORATION. IT IS SUBJECT TO CHANGE AND THE CONTROLLING ENGINEERING ORGANIZATION SHOULD BE CONTACTED FOR THE LATEST REVISION.

DIMENSIONS: mm

TOLERANCES UNLESS OTHERWISE SPECIFIED:
0 PLC ±0.3
1 PLC ±0.3
2 PLC ±0.3
3 PLC ±-
4 PLC ±-
ANGLES ±2°

MATERIAL -
FINISH -

DWN H. URBAN 27-Apr-99
CHK H. SCHMITT 27-Apr-99
APVD -
PRODUCT SPEC 108-18689
APPLICATION SPEC 114-18332
WEIGHT -
CUSTOMER DRAWING

AMP
AMP Deutschland GmbH
D - 63225 Langen

NAME
MQS SOCKETHOUSING FOR 32 POS HOUSING
MQS BUCHSENGEHÄUSE FÜR 32 POL GEHÄUSE
-

SIZE	CAGE CODE	DRAWING NO	RESTRICTED TO
A2	00779	C-1241724	-

SCALE 2:1 SHEET 1 OF 1 REV E