THIS DRAWING IS UNPUBLISHED. RELEASED FOR PUBLICATION 1997
© COPYRIGHT 1997 BY TYCO ELECTRONICS CORPORATION. ALL INTERNATIONAL RIGHTS RESERVED.

LOC	DIST
A1	-

REVISIONS

P	LTR	DESCRIPTION	DATE	DWN	APVD
	A8	ECR-10-022250	27.10.2010	SR	AR
	A9	ECR-17-013084	29MAR18	SG	MKO

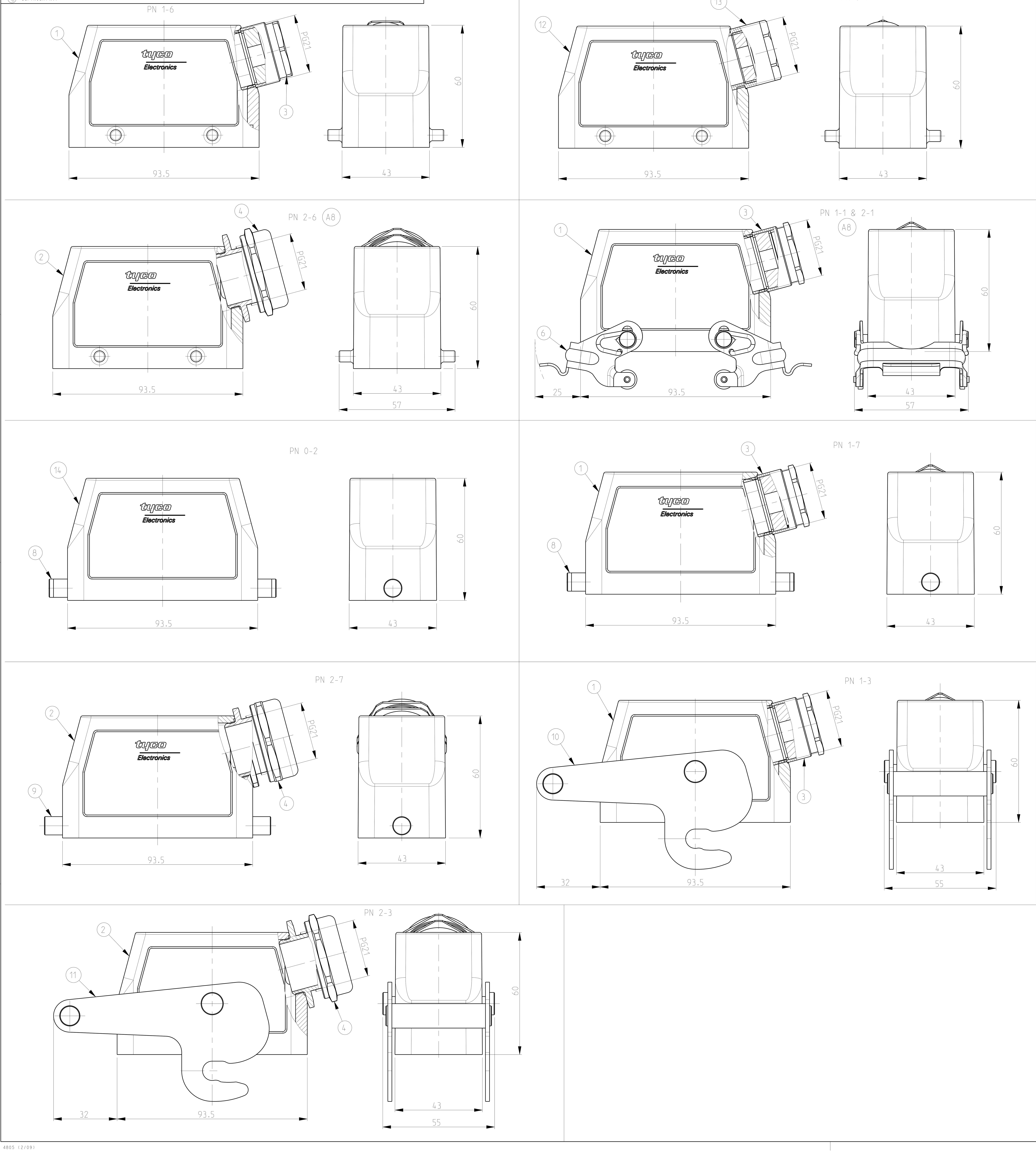

NOTES

1 Material: Housing: aluminium diecasting alloy
Seals: Neoprene: Viton

2 Surface:- -Powder varnish grey
-Aluminium oxide+Varnish black/ White/ Yellow

3 Varnish on the inside not necessary

4 Packaging
Packaging quantity 5 piece in a box

5 Special packaging quantity 50 pieces in kanban-box

6 OBSOLETE PARTS: OBSOLETE CIS STREAMLINING PER D.RENAUD/D.SINISI

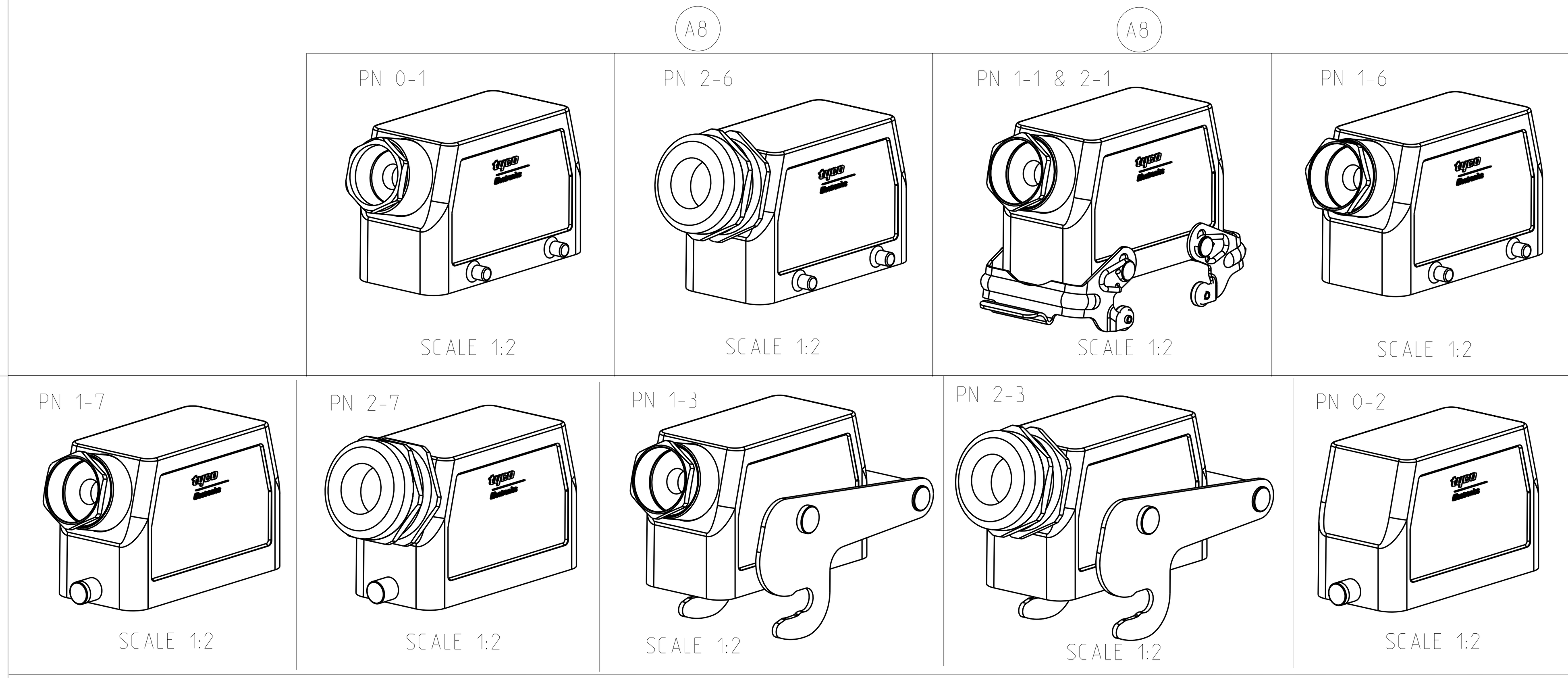

0-2	0-1	2-3	1-3	2-7	1-7	2-1	1-1	2-6	1-6	DESCRIPTION	MATERIAL	SURFACE	COLOR	ITEM NO	NOTES
OBSOLETE	OBSOLETE	OBSOLETE 6													
1										Hood HB.16	Aluminium		Grey	14	Without Bolt
	1									Cable connection round PG21	Brass	Nickel plated	-	13	Seal from Viton
	1									Hood HB.16.Pg.1.21	Aluminium	-	Black	12	Unpainted
		1								ZB-Central locking	Stainless steel	-	-	11	-
			1							ZB-Central locking	Steel	Zinc plated	Blue	10	-
				2						LB-Clip bolt	Stainless steel	Blank	-	9	-
2					2					LB-Clip bolt	Steel	Zinc plated	Blue	8	-
										VS-Locking clip	Stainless steel	-		7	-
							2			VS-Locking clip	Steel	Zinc plated	Blue	6	-
										VS-Clip bolt	Stainless steel	-		5	-
		1		1		1		1		Gland fitting PG21	Brass	Nickel plated		4	-
			1		1		1		1	Cable conection round PG21	Brass	Nickel plated		3	-
		1		1		1		1		Hood HB.16.Pg.1.21	Aluminium	Aluminium oxide	Black	2	-
			1		1		1		1	Hood HB.16.Pg.1.21	Aluminium	-	Grey	1	-
HB.16.ST.GR	HB.16.STS.1.21.V SO	HB-K/Z.16.STS-ZB.1.21	HB-Z.16.STS-ZB.1.21	HB-K.16.STS-GR.1.21	HB.16.STS-GR.1.21	HB-K.16.STS-VS.1.21	HB.16.STS-VS.1.21	HB-K.16.STS.1.21	HB.16.STS.1.21	ORDERING TEXT					

THIS DRAWING IS A CONTROLLED DOCUMENT FOR TYCO ELECTRONICS CORPORATION IT IS SUBJECT TO CHANGE AND THE CONTROLLING ENGINEERING ORGANIZATION SHOULD BE CONTACTED FOR THE LATEST REVISION.

DIMENSIONS:	mm
TOLERANCES UNLESS OTHERWISE SPECIFIED: n.ISO 8015; n.ISO 2768-mH-E; n.DIN 16901-120	0 PLC ± / 1 PLC ± / 2 PLC ± / 3 PLC ± / 4 PLC ± / ANGLES ±1°
MATERIAL	-
FINISH	-
DWN	Schneider 30.11.1998
CHK	Schweiger 30.11.1998
APVD	-
PRODUCT SPEC	-
APPLICATION SPEC	-
WEIGHT	-
NAME	Hood.HB.16
SIZE	A1
CAGE CODE	00779
DRAWING NO	C-1102289
RESTRICTED TO	-
SCALE	1:1
SHEET	1 OF 1
REV	A9

TE Connectivity

CUSTOMER DRAWING

4805 (2/09)

Pro/ENGINEER DRAWING