THIS DRAWING IS UNPUBLISHED. RELEASED FOR PUBLICATION ,19 .
© COPYRIGHT 19 BY AMP INCORPORATED. ALL RIGHTS RESERVED.

LOC	DIST
BG	1

REVISIONS

P	LTR	DESCRIPTION	DATE	DWN	APVD
	0	INITIAL REL PER LC00-0191-98	09OCT98	MS	DA

1. DIMENSIONS ARE MAXIMUM UNLESS OTHERWISE SPECIFIED.

2. CABLE, UNSHIELDED 24 AWG, 4 TWISTED PAIRS, 7/32 STRANDED CONDUCTORS, 100 OHMS, LEVEL 5.

3. DESIGNATIONS IN PARENTHESES ( ) ARE FOR REFERENCE ONLY.

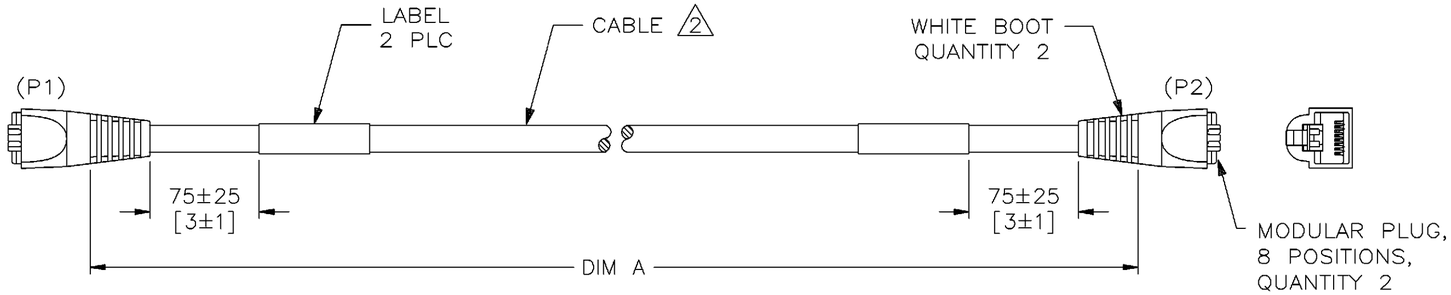

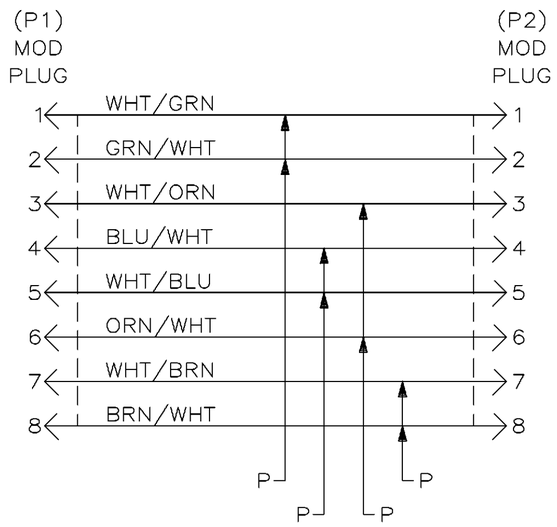

WIRING DIAGRAM

DIM A	mm, REF	FEET, REF	PART NO.
2184.4 [86.00]	2133.6	7	109629-7
1879.6 [74.00]	1828.8	6	109629-6
1574.8 [62.00]	1524.0	5	109629-5
1270.0 [50.00]	1219.2	4	109629-4
965.2 [38.00]	914.4	3	109629-3
660.4 [26.00]	609.6	2	109629-2
355.6 [14.00]	304.8	1	109629-1

THIS DRAWING IS A CONTROLLED DOCUMENT FOR AMP INCORPORATED. IT IS SUBJECT TO CHANGE AND THE CONTROLLING ENGINEERING ORGANIZATION SHOULD BE CONTACTED FOR THE LATEST REVISION.

DIMENSIONS: mm [INCHES]

TOLERANCES UNLESS OTHERWISE SPECIFIED:
0 PLC ±-
1 PLC ±-
2 PLC ±-
3 PLC ±-
4 PLC ±-
ANGLES ±-

MATERIAL –
FINISH –

DRAWN BY: P. CHAN 19DEC95
CHECKED BY: –
APPROVED BY: –
PRODUCT SPEC –
APPLICATION SPEC –
WEIGHT –

AMP
AMP of Canada Ltd
Markham, Ontario

NAME
CABLE ASSEMBLY, WHITE LONG BOOT, MODULAR PLUG, 8 POSITIONS, CATEGORY 5

SIZE A2 | CAGE CODE 00779 | DRAWING NO C-109629

CUSTOMER DRAWING | SCALE 1:1 | SHEET 1 OF 1 | REV 0

109629