THIS DRAWING IS UNPUBLISHED. RELEASED FOR PUBLICATION 2018
© COPYRIGHT 2018 BY - ALL RIGHTS RESERVED.

REVISIONS

P	LTR	DESCRIPTION	DATE	DWN	APVD
	F	REVISED PER PCN :E-18-007949	23MAY2018	DD	DM
	F1	REVISED PER PCN-24-200133	18MAR2024	RK	CB
	G	REVISED PER PCN-24-208998	20MAY2024	GB	DM
	G1	REVISED PER PCN-25-234736	06FEB2025	GB	DM

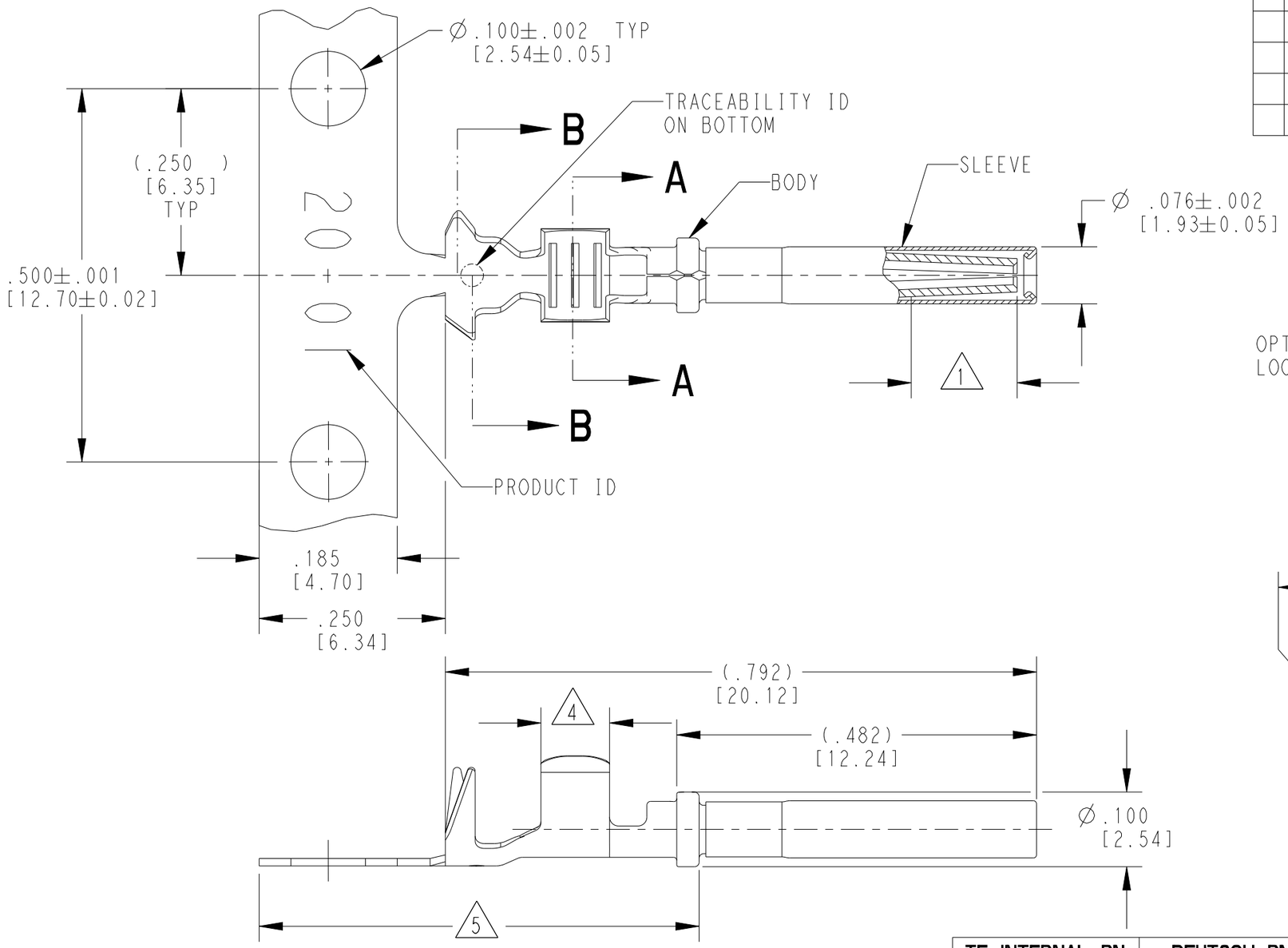

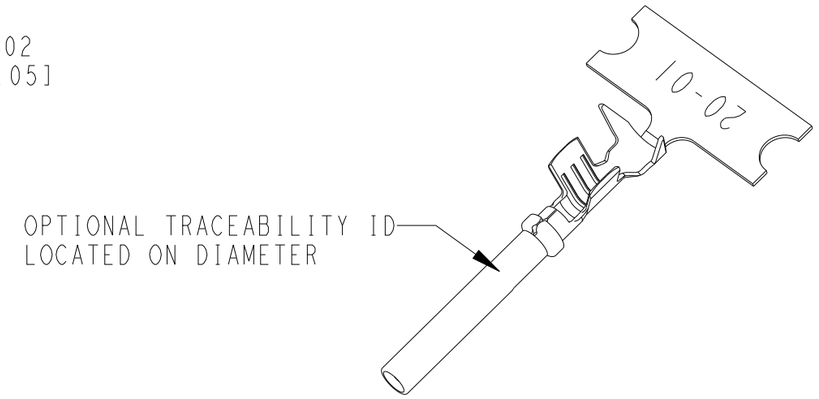

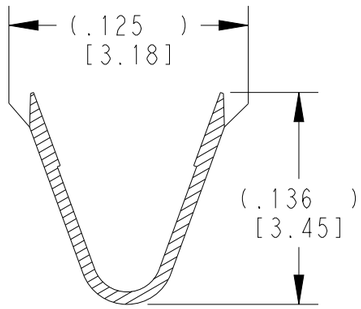

SECTION A-A
WIRE BARREL

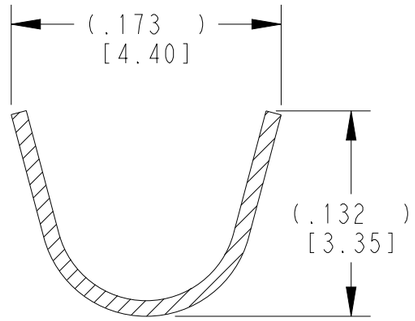

SECTION B-B
INSULATION BARREL

5 TIN PLATING MAY BE IN THIS REGION.

4 TIN PLATED REGION.

3 MATERIAL:
BODY: .010 [0.25] THICK COPPER ALLOY
SLEEVE: STAINLESS STEEL

2 WIRE RANGE: 22 AWG TO 16 AWG [0.35-1.50 mm²]
INSULATION RANGE: Ø.075-.125 [Ø1.91-3.18]

1 GOLD PLATED REGION.

NOTES: UNLESS OTHERWISE SPECIFIED

	TE INTERNAL PN	DEUTSCH PN	REV	PLATING
	1062-20-0122	1062-20-0122	E	Ni/Cu overall
1	1062-20-0144	1062-20-0144	F	Selective Au, Ni overall, Sn/Ni Wire Barrel
	1062-20-0177	1062-20-0177	E	Sn/Ni/Cu overall

THIS DRAWING IS A CONTROLLED DOCUMENT.

DIMENSIONS: INCHES[mm]

TOLERANCES UNLESS OTHERWISE SPECIFIED:
0 PLC ±
1 PLC ±
2 PLC ±
3 PLC ±.025 [0.64]
4 PLC ±
ANGLES ±

MATERIAL 3

FINISH SEE TABLE

DWN J. APOSTOL 01DEC2009
CHK D. MEYER 02DEC2009
APVD R. REED 02DEC2009
PRODUCT SPEC 108-151000
APPLICATION SPEC 114-151003
WEIGHT 0.21 g

TE Connectivity

NAME SOCKET, STAMPED CONTACT
SIZE 20
16-22 AWG, .075-.125 INS

SIZE	CAGE CODE	DRAWING NO	RESTRICTED TO
A3	4AFU8	C-1062-20-01XX	-

CUSTOMER DRAWING | SCALE 6:1 | SHEET 1 OF 1 | REV G1

1470-19 (3/13)