THIS DRAWING IS UNPUBLISHED
RELEASED FOR PUBLICATION 20
© COPYRIGHT 2016 BY - TE CONNECTIVITY
ALL RIGHTS RESERVED.

REVISIONS

P	LTR	DESCRIPTION	DATE	DWN	APVD
	C	REVISED PER ECO-16-010231	21MAR2016	MGM	DM

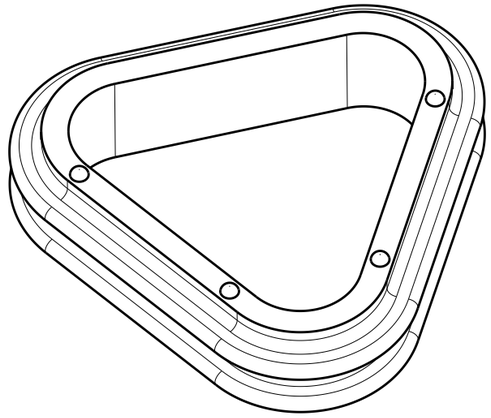

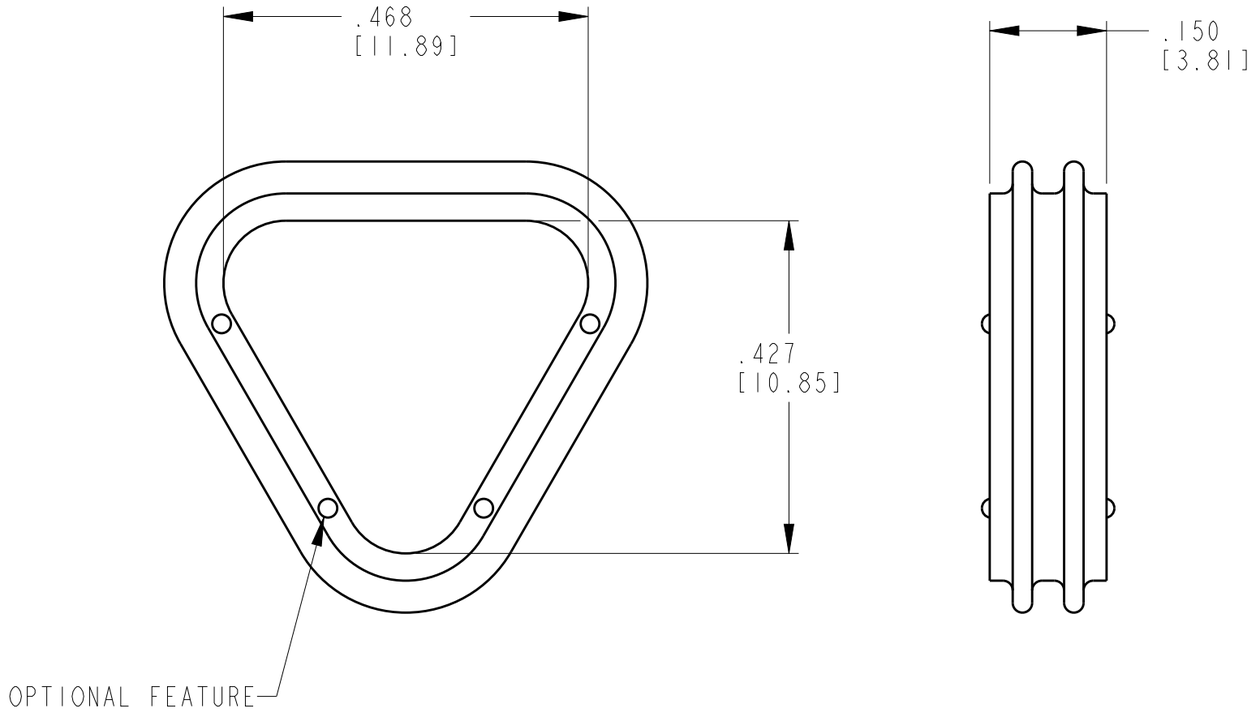

TE INTERNAL PN	DEUTSCH PN
1010-002-0306	1010-002-0306

1 MATERIAL: SILICONE (RED-ORANGE)

NOTES.

THIS DRAWING IS A CONTROLLED DOCUMENT.

DIMENSIONS: INCHES[mm]

TOLERANCES UNLESS OTHERWISE SPECIFIED:
0 PLC ±
1 PLC ±
2 PLC ±
3 PLC ±.025 [0.64]
4 PLC ±
ANGLES ±0° 30' 0"

MATERIAL 1

FINISH -

DWN C. BUNKE 15MAY1992
CHK C. BUNKE 15MAY1992
APVD J. ALBERS 15MAY1992
PRODUCT SPEC N/A
APPLICATION SPEC N/A
WEIGHT 0.27g

TE Connectivity

NAME SEAL, FRONT, STANDARD TYPE 3 CONTACT PLUG DT SERIES

SIZE	CAGE CODE	DRAWING NO	RESTRICTED TO
A3	4AFU8	C-1010-002-0306	-

CUSTOMER DRAWING

SCALE 5:1 SHEET 1 OF 1 REV C

1470-19 (3/13)