MSD INC. ENGINEERING DATA SHEET

RELAY TYPE: FCA-325-3362 L	COMPUTER PART No. 9383534	TEST PROCEDURE MSDP- 790
CUSTOMER/SPECIFICATION: M83536/33-002L	REV. NONE	

TEST REQUIREMENTS

COIL RES.: 290 OHMS ±10% OPERATE TIME: 15 mS MAX RELEASE TIME: 15 mS MAX

CONTACT MAKE BOUNCE: 1.0 mS MAX N.O. BREAK BOUNCE: 0.1 mS MAX

CONTACT STABILIZATION TIME: 2.5 mS MAX RATED COIL VOLTAGE: 28 Vdc

MFG TEST: 0.5 mV @ 100 mA - 6 Vdc

CONTACT VOLTAGE DROP: FINAL TEST: 60 mV @ 10 A - 28 Vdc

HI-POT: 1250 Vrms ALL POINTS, EXCEPT 1000 Vrms COIL TO CASE

INSULATION RESISTANCE: 100 MEGOHMS MIN @ 500 Vdc

VIBRATION: MIL-STD-202, METHOD 204 (30 G's / 10-3000 HZ)

SEAL TEST: 1×10^{-8} MAX LEAK RATE COIL TRANSIENT SUPPRESSION: 42 Vdc MAX

OTHER:

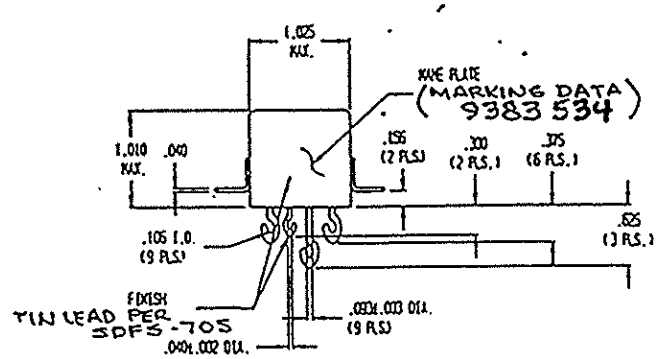

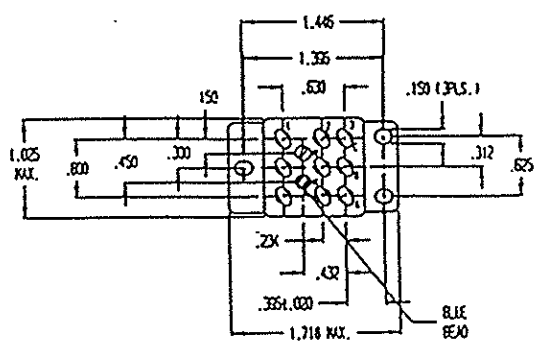

Prepared By: Date	Approved By: Date
LES WYNNE 3-14-96	N. Lochner 3-19-96

Rev.	ECN No.	Date
A	96-065	3-14-96

SPECIAL INSTRUCTIONS