DRAWING NUMBER		BS 308 THIRD ANGLE PROJECTION
605677ENV	A3	IF IN DOUBT, ASK

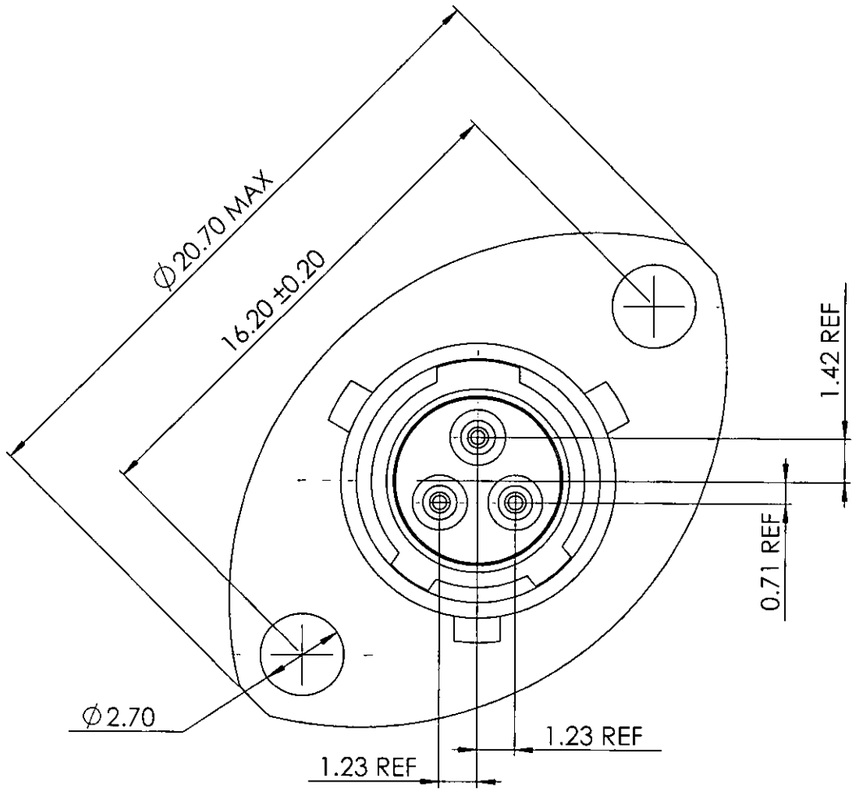

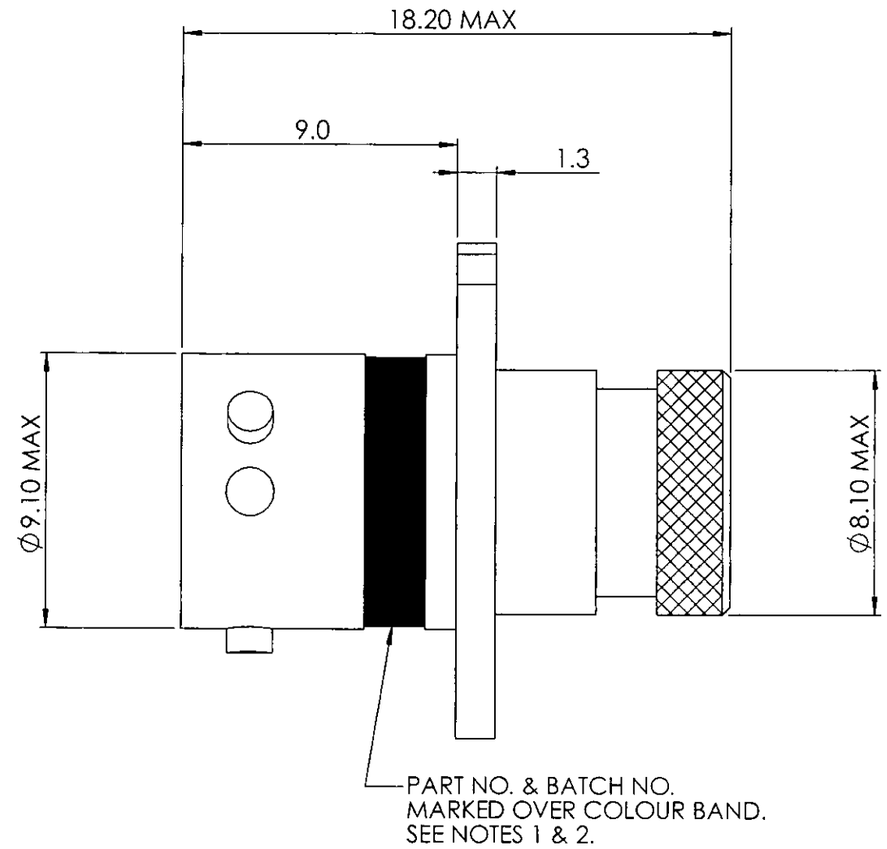

NOTES

1. CONNECTOR ORIENTATION IDENTIFIED BY COLOUR BAND COLOUR APPLIED. AS BELOW.
   N ORIENTATION – RED
   A ORIENTATION – YELLOW
   B ORIENTATION – BLUE
   C ORIENTATION – ORANGE
   D ORIENTATION – GREEN
   E ORIENTATION – GREY

2. PART NUMBER SHORTENED FOR MARKING ONTO CONNECTOR. SEE NOTE 3 FOR FULL PART NUMBER STRUCTURE TO BE USED FOR ORDERING. SEE BELOW FOR SHORTENED PART NO. EXAMPLE :-

   DEUTSCH ASU0PN RP654321

   SERIES PREFIX
   STYLE (2 HOLE MOUNT)
   CONTACT TYPE & ORIENTATION
   BATCH NUMBER

NOTES (CONTINUED)

3. FULL PART NUMBER STRUCTURE TO BE USED FOR ORDERING. SEE BELOW FOR EXAMPLE :-

   ASU003 - 03PN – HE RP654321

   SERIES PREFIX
   STYLE (2 HOLE MOUNT)
   SHELL SIZE
   CONTACT ARRANGEMENT
   CONTACT TYPE
   KEYWAY ORIENTATION
   HARSH ENVIRONMENT
   BATCH NUMBER

ISSUE	CHANGE NOTE	DRAWN	CHECKED	APP. ENG.	APP. B.U.	DATE
A	CN043549	PJB				27-08-03

MATERIAL

HEAT TREATMENT & FINISH

PACKAGING

CUSTOMER APPROVAL

© THE COPYRIGHT OF THIS DRAWING IS RESERVED BY DEUTSCH LTD. IT IS ISSUED ON CONDITION THAT IT IS NOT COPIED, REPRODUCED OR DISCLOSED TO A THIRD PARTY EITHER WHOLLY OR IN PART WITHOUT THE CONSENT IN WRITING OF DEUTSCH LTD.

SCALE 5:1

GENERAL TOLERANCES UNLESS OTHERWISE STATED.
±0.4mm ON WHOLE NUMBERS
±0.2mm ON ONE PLACE DECIMALS
±0.1mm ON TWO PLACE DECIMALS
±1/2° ON ANGLES
±0.05mm ON DRILLED HOLES
ALL DIAMETERS Ø0.10
REMOVE ALL BURRS AND SHARP EDGES 0.1 MAX. UNLESS OTHERWISE STATED.

DIMENSIONS IN MILLIMETRES UNLESS OTHERWISE STATED

DEUTSCH
A STEP AHEAD IN TECHNOLOGY LTD
ST LEONARDS ON SEA, EAST SUSSEX, TN38 9RF
TEL. +44 (0)1424 852721

TITLE
RECEPTACLE 2 HOLE MOUNT ENVELOPE DETAILS AS 3 WAY

DRAWING NUMBER
605677ENV